Product data sheet

Specifications



Cam reversing switch, Harmony K, front mounting, plastic, 3 poles, position 0, 60 degree, 50A, 64x64mm, marked 1/0/2

K50E003WP

Product availability: Non-Stock - Not normally stocked in distribution facility

Main

Range of Product	Harmony K
Product or Component Type	Complete cam switch
Component name	K50
[Ith] conventional free air thermal current	50 A
Product mounting	Front mounting
Fixing Mode	4 holes
Cam switch head type	With front plate 64 x 64 mm
Type of operator	Black handle
Rotary handle padlocking	Without
Presentation of legend	With metallic, 1 - 0 - 2 black
Cam switch function	Reversing switch
Return	Without
Off position	With Off position
Poles description	3P
Switching positions	Right: 0° - 60° Left: 0° - 300°
IP degree of protection	IP40 conforming to IEC 60529

Complementary

Switching angle	60 °
[Ui] rated insulation voltage	690 V 3)IEC 60947-1
Short-circuit current	5000 A
Short-circuit protection	63 A cartridge fuse gG
[Uimp] rated impulse withstand voltage	6 kV EN 947-1 6 kV IEC 947-1
Contact operation	Slow-break
positive opening	With
Electrical connection	Captive screw clamp terminals flexible 2 x 6 mm² Captive screw clamp terminals solid 2 x 10 mm²
Tightening torque	17.7 lbf.in (2 N.m)

Price is “List Price” and may be subject to a trade discount – check with your local distributor or retailer for actual price.

Disclaimer: This documentation is not intended as a substitute for and is not to be used for determining suitability or reliability of these products for specific user applications

Switching capacity in mA	15000 mA DC 120 V 2 inductive 50 ms) 15000 mA DC 180 V 3 inductive 50 ms) 15000 mA DC 60 V 1 inductive 50 ms) 20000 mA DC 140 V 3 inductive 50 ms) 20000 mA DC 48 V 1 inductive 50 ms) 20000 mA DC 95 V 2 inductive 50 ms) 30000 mA DC 30 V 1 inductive 50 ms) 30000 mA DC 60 V 2 inductive 50 ms) 30000 mA DC 90 V 3 inductive 50 ms) 3500 mA DC 110 V 1 inductive 50 ms) 3500 mA DC 220 V 2 inductive 50 ms) 3500 mA DC 330 V 3 inductive 50 ms) 37000 mA DC 120 V 2 resistive 1 ms) 37000 mA DC 180 V 3 resistive 1 ms) 37000 mA DC 60 V 1 resistive 1 ms) 40000 mA DC 140 V 3 resistive 1 ms) 40000 mA DC 24 V 1 inductive 50 ms) 40000 mA DC 48 V 1 resistive 1 ms) 40000 mA DC 48 V 2 inductive 50 ms) 40000 mA DC 70 V 3 inductive 50 ms) 40000 mA DC 95 V 2 resistive 1 ms) 50000 mA DC 24 V 1 resistive 1 ms) 50000 mA DC 48 V 2 resistive 1 ms) 50000 mA DC 70 V 3 resistive 1 ms)
Mechanical durability	300000 cycles
CAD overall width	2.5 in (64 mm)
CAD overall height	2.5 in (64 mm)
CAD overall depth	4.7 in (120 mm)
Product Weight	1.069 lb(US) (0.485 kg)

Environment

Standards	IEC 60947-3
Product certifications	CULus 120 V 3 hp 1 phase CULus 480 V 25 hp 3 phase CULus 240 V 7.5 hp 1 phase CULus 240 V 7.5 hp 3 phase
Protective treatment	TC
Ambient Air Temperature for Operation	-13…131 °F (-25…55 °C)
Ambient Air Temperature for Storage	-40…158 °F (-40…70 °C)
Electrical shock protection class	Class II conforming to IEC 60536 Class II conforming to NF C 20-030

Ordering and shipping details

Category	US10CS121446
Discount Schedule	0CS1
GTIN	3389110085006
Returnability	Yes
Country of origin	AT

Packing Units

Unit Type of Package 1	PCE
Nbr. of units in pkg.	1
Package 1 Height	5.4 in (13.7 cm)
Package 1 Width	2.8 in (7.2 cm)

Package 1 Length	2.8 in (7.2 cm)
Package weight(Lbs)	13.0 oz (368.0 g)
Unit Type of Package 2	S03
Number of Units in Package 2	30
Package 2 Height	11.8 in (30.0 cm)
Package 2 Width	11.8 in (30.0 cm)
Package 2 Length	15.7 in (40.0 cm)
Package 2 Weight	25.554 lb(US) (11.591 kg)

Contractual warranty

Warranty (in months)	18

Environmental Data

Schneider Electric aims to achieve Net Zero status by 2050 through supply chain partnerships, lower impact materials, and circularity via our ongoing “Use Better, Use Longer, Use Again” campaign to extend product lifetimes and recyclability.

Environmental Data explained >

How we assess product sustainability >

Environmental footprint

Environmental Disclosure	Product Environmental Profile

Use Better

Materials and Substances

Packaging made with recycled cardboard	Yes
Packaging without single use plastic	Yes
EU RoHS Directive	Compliant
REACh Regulation	Free of Substances of Very High Concern above the threshold
California proposition 65	WARNING: This product can expose you to chemicals including: Nickel compounds, which is known to the State of California to cause cancer, and Di-isodecyl phthalate (DIDP), which is known to the State of California to cause birth defects or other reproductive harm. For more information go to www.P65Warnings.ca.gov

Use Longer

Lifetime extension

Repair	No

Use Again

Repack and remanufacture

Circularity Profile	No need of specific recycling operations
Take-back	No
WEEE Label	The product must be disposed on European Union markets following specific waste collection and never end up in rubbish bins.

Dimensions Drawings

Dimensions

Front Mounting

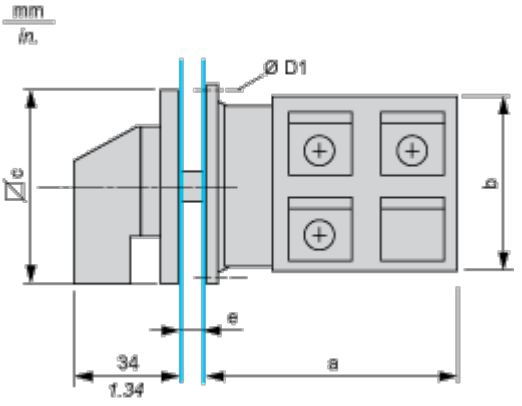

e support panel thickness 0.5 to 5.5 mm / 0.02 to 0.22 in in.

a		b		c		D1	
mm	in.	mm	in.	mm	in.	mm	in.
80.8	3.18	60	2.36	64	2.52	4.1	0.16

Mounting and Clearance

Panel Cut-Out

Front Mounting

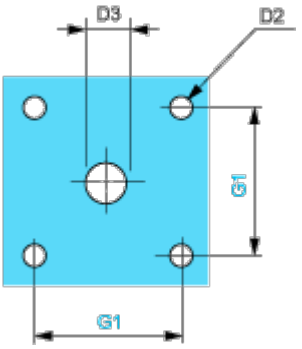

D2		D3		G1	
mm	in.	mm	in.	mm	in.
4.5	0.18	10	0.39	48	1.89

Technical Description

Link Positions (Factory Mounted)

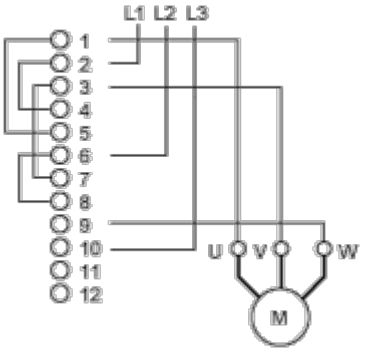

Marking

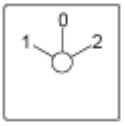

Angular Position of Switch

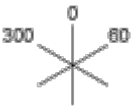

Switching Program

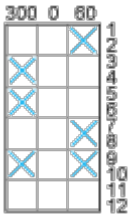

Convention Used for Switching Program Representation

Contact closed

Contact closed in 2 positions and maintained between the 2 positions

Sealed assembly for auto-maintain control

Overlapping contacts

Spring return position: for a switching angle of 90°, spring return is over 30° after the last position (for a maximum of 3 simultaneous contacts).

Example:

