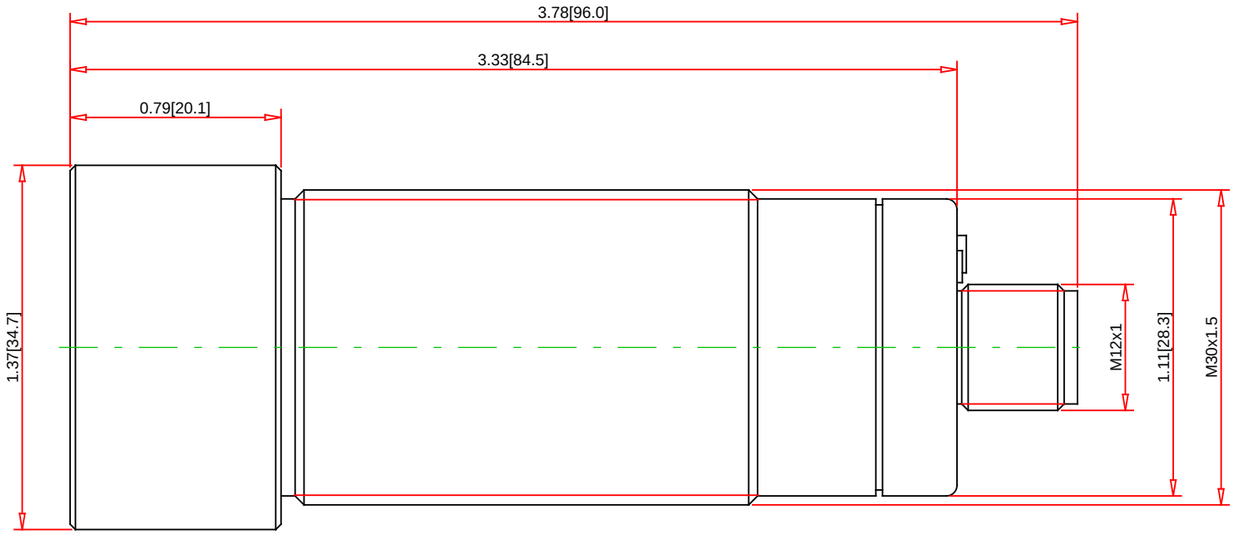

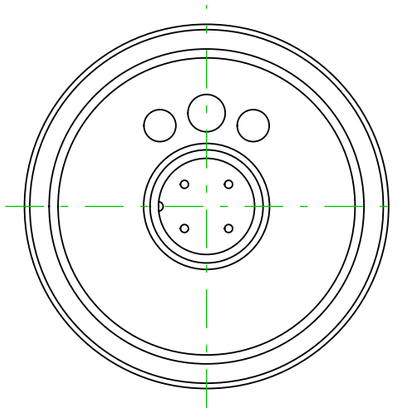

Note:
- Drawings Not To Scale
- Drawings Subject to Change Without Notice
- Dimensions are inches next to [Millimeters]

Part No.:

SM952A100000

Telemecanique Sensors

Telemecanique Sensors
1875 Founders Drive
Dayton, OH 45420-4017
Customer Care Center : 1-800-435-2121
Web : www.tesensors.com

Technical Information:

Sensing Window:	
Far Limit:	
Sensing Range:	50.8 mm to 1.0 m (2.0 in to 39.0 in)
Circuit Type:	Normally Open
Output Mode:	NPN/PNP
Volts Type:	DC
Voltage Range:	12-24 VDC
Max Load:	100 mA
Current Consumption:	100 mA
Sonic Frequency:	200 Hz
Temp Range:	0° to 50° C (32° to 122° F)
NEMA Type:	4X (indoor use only)
IP Rating:	IP67
Standards:	UL, CE Rohs

Specification:

Sensor Type:	Ultrasonic Sensor
Description:	Ultrasonic Sensor, Dual-Level - Pump-out Latch, 30 mm Barrel, 12-24 VDC
Body Style:	Barrel
Diameter:	mm
Housing Material:	
Face Material:	Silicone Rubber
Field Configurable:	No
Functionality:	Default Window: ± 6.4 mm (0.25 in)
Cable Size:	
Connector Type:	M12
Special Features:	