Product data sheet
Characteristics

XPSAR311144P
module XPSAR - Emergency stop - 24 V AC DC

Product availability : Stock - Normally stocked in distribution facility

Price* : 840.00 USD



Main

Range of product	Preventa Safety automation
Product or component type	Preventa safety module
Safety module name	XPSAR
Safety module application	For emergency stop, switch and safety light curtain monitoring
Function of module	Monitoring of a movable guard associated with 2 switches and automatic start Monitoring of electro-sensitive protection equipment (ESPE) Monitoring of a movable guard Emergency stop monitoring 1-channel wiring Emergency stop with 2 NC contacts monitoring 2-channel wiring Multiple emergency stop monitoring 2-channel wiring
Safety level	Can reach PL e/category 4 conforming to EN/ISO 13849-1 Can reach SILCL 3 conforming to EN/IEC 62061
Safety reliability data	DC > 99 % conforming to EN/ISO 13849-1 MTTFd = 277.8 years conforming to EN/ISO 13849-1 PFHd = 2.22E-9 1/h conforming to EN/IEC 62061
Type of start	Configurable
Connections - terminals	Captive screw clamp terminals, removable terminal block, clamping capacity: 2 x 0.5...2 x 1.5 mm² flexible cable with cable end, with double bezel Captive screw clamp terminals, removable terminal block, clamping capacity: 1 x 0.2...1 x 2.5 mm² flexible cable with cable end, with double bezel Captive screw clamp terminals, removable terminal block, clamping capacity: 1 x 0.2...1 x 2.5 mm² solid cable with cable end, with double bezel Captive screw clamp terminals, removable terminal block, clamping capacity: 1 x 0.25...1 x 2.5 mm² flexible cable with cable end, with double bezel Captive screw clamp terminals, removable terminal block, clamping capacity: 2 x 0.2...2 x 1 mm² solid cable with cable end, with double bezel Captive screw clamp terminals, removable terminal block, clamping capacity: 2 x 0.2...2 x 1.5 mm² flexible cable with cable end, with double bezel Captive screw clamp terminals, removable terminal block, clamping capacity: 2 x 0.25...2 x 1 mm² flexible cable with cable end, with double bezel
Output type	Relay instantaneous opening 7 NO, volt-free
Number of additional circuits	2 NC + 4 solid state outputs
[Us] rated supply voltage	24 V AC (- 15...10 %) 24 V DC (- 15...10 %)

Disclaimer: This documentation is not intended as a substitute for and is not to be used for determining suitability or reliability of these products for specific user applications

Complementary

Synchronisation time between inputs	100 ms
Supply frequency	50/60 Hz
Power consumption in W	<= 4 W DC
Power consumption in VA	<= 7 VA AC
Input protection type	Internal, electronic
[Uc] control circuit voltage	24 V DC
Line resistance	50 Ohm
Breaking capacity	C300: 360 VA, AC-15 (holding) relay output C300: 3600 VA, AC-15 (inrush) relay output
Breaking capacity	20 mA at 24 V 2 A at 24 V (DC-13) time constant: 50 ms for relay output
Output thermal current	10 A per relay relay output
[Ith] conventional free air thermal current	40 A
Associated fuse rating	10 A fuse type fast blow for relay output conforming to EN/IEC 60947-5-1, DIN VDE 0660 part 200 6 A fuse type gG or gL for relay output conforming to EN/IEC 60947-5-1, DIN VDE 0660 part 200
Minimum output current	170 mA for relay output
Minimum output voltage	17 V relay output
Response time on input open	<= 20 ms
[Ui] rated insulation voltage	300 V (degree of pollution: 2) conforming to DIN VDE 0110 part 1 300 V (degree of pollution: 2) conforming to IEC 60947-5-1
[Uimp] rated impulse withstand voltage	4 kV overvoltage category III conforming to IEC 60947-5-1 4 kV overvoltage category III conforming to DIN VDE 0110 part 1
Local signalling	4 LEDs
Current consumption	30 mA at 24 V DC (on power supply)
Mounting support	35 mm symmetrical DIN rail
Product weight	0.66 lb(US) (0.3 kg)

Environment

Standards	EN/IEC 60204-1 EN/IEC 60947-5-1 EN 1088/ISO 14119 EN/ISO 13850
Product certifications	UL TÜV CSA
IP degree of protection	IP20 (terminals) conforming to EN/IEC 60529 IP40 (enclosure) conforming to EN/IEC 60529
Ambient air temperature for operation	14...131 °F (-10...55 °C)
Ambient air temperature for storage	-13...185 °F (-25...85 °C)

Ordering and shipping details

Category	22477 - SAFETY MODULES (PREVENTA)
Discount Schedule	SAF2
GTIN	00785901343707
Nbr. of units in pkg.	1
Package weight(Lbs)	1.25
Returnability	Y
Country of origin	ID

Contractual warranty

Warranty period	18 months

Dimensions

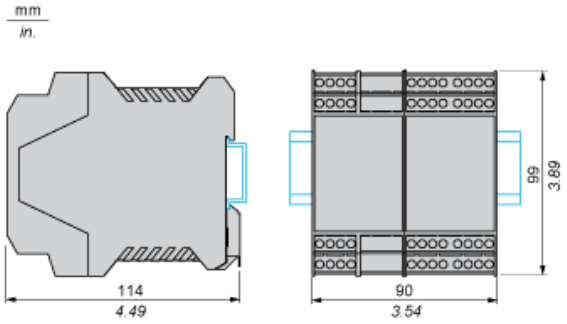

Wiring Diagrams

Refer to the Instruction Sheet

To download the instruction sheet, follow below procedure:

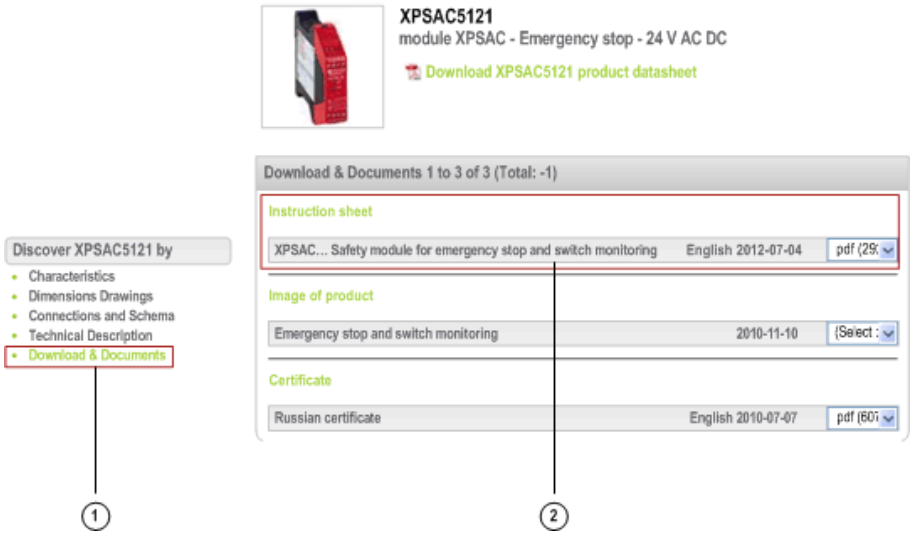

1 Click on Download & Documents.
2 Click on Instruction sheet.