Product data sheet
Characteristics

HMISTO511
touch panel screen 3’’4 monochrome G/O/R



Main

Range of product	Harmony STO & STU
Product or component type	Touch panel screen
Software designation	Vijeo Designer
Operating system	Harmony
Processor name	CPU RISC

Complementary

Display size	3.4 inch
Display type	Backlit monochrome STN LCD
Background colour	Green, orange and red
Display resolution	200 x 80 pixels
Touch panel	Analogue
Backlight lifespan	10000 hours red 50000 hours orange 50000 hours green
Brightness	8 levels
Contrast	16 levels via touch panel
Character font	Japanese (ANK, Kanji) Korean Chinese (simplified Chinese) ASCII Taiwanese (traditional Chinese)
[Us] rated supply voltage	24 V DC +/- 20 %
Local signalling	Normal operation 1 LED green)
Number of pages	Limited by internal memory capacity
Memory description	Application memory 16 MB Back up of data 128 kB
Integrated connection type	1 USB 2.0 type mini B 1 USB 2.0 type A Power supply - removable screw terminal block COM1 serial link - female RJ45 - RS232C/RS485 <= 115.2 kbits/s)
Supply	External source
Realtime clock	Access to the PLC real-time clock
Downloadable protocols	Uni-TE Third party protocols Modbus
Fixing mode	By 2 spring clips 1.6...5 mm thick panel
Enclosure material	PPT
Marking	CE

The information provided in this documentation contains general descriptions and/or technical characteristics of the performance of the products contained herein.
This documentation is not intended as a substitute for and is not to be used for determining suitability or reliability of these products for specific user applications.
It is the duty of any such user or integrator to perform the appropriate and complete risk analysis, evaluation and testing of the products with respect to the relevant specific application or use thereof.
Neither Schneider Electric Industries SAS nor any of its affiliates or subsidiaries shall be responsible or liable for misuse of the information contained herein.

Environment

Standards	EN 61131-2 IEC 61000-6-2 UL 508 UL 1604 FCC Class A
Product certifications	C-tick CE UL Class 1 Division 2 T5 GOST UL Class 1 Division 2 T4A CULus
Condition of tests	0…90 % without condensation
Operating altitude	<= 6561.68 ft (2000 m)
IP degree of protection	IP20 IEC 60529 rear panel) IP65 IEC 60529 front panel)
NEMA degree of protection	NEMA 4X front panel indoor use)
Shock resistance	15 gn 11 msIEC 60068-2-27
Vibration resistance	+/- 3.5 mm 5…9 Hz) IEC 60068-2-6 1 gn 9…150 Hz) IEC 60068-2-6
Electromagnetic compatibility	Resistance to radiated electromagnetic fields 10 V/m IEC 61000-4-3

Ordering and shipping details

Category	22569 - MAGELIS XBT-GT (AND XBT-G)
Discount Schedule	MC2
GTIN	00785901655817
Nbr. of units in pkg.	1
Package weight(Lbs)	0.85 lb(US) (0.39 kg)
Returnability	No
Country of origin	CN

Packing Units

Unit Type of Package 1	PCE
Package 1 Height	3.54 in (9 cm)
Package 1 width	5.12 in (13 cm)
Package 1 Length	7.28 in (18.5 cm)

Offer Sustainability

REACh Regulation	REACh Declaration
REACh free of SVHC	Yes
EU RoHS Directive	Pro-active compliance (Product out of EU RoHS legal scope) EU RoHS Declaration
Mercury free	Yes
RoHS exemption information	Yes
China RoHS Regulation	China RoHS Declaration
WEEE	The product must be disposed on European Union markets following specific waste collection and never end up in rubbish bins.

Contractual warranty

Warranty	18 months

Dimensions with Spring Clips

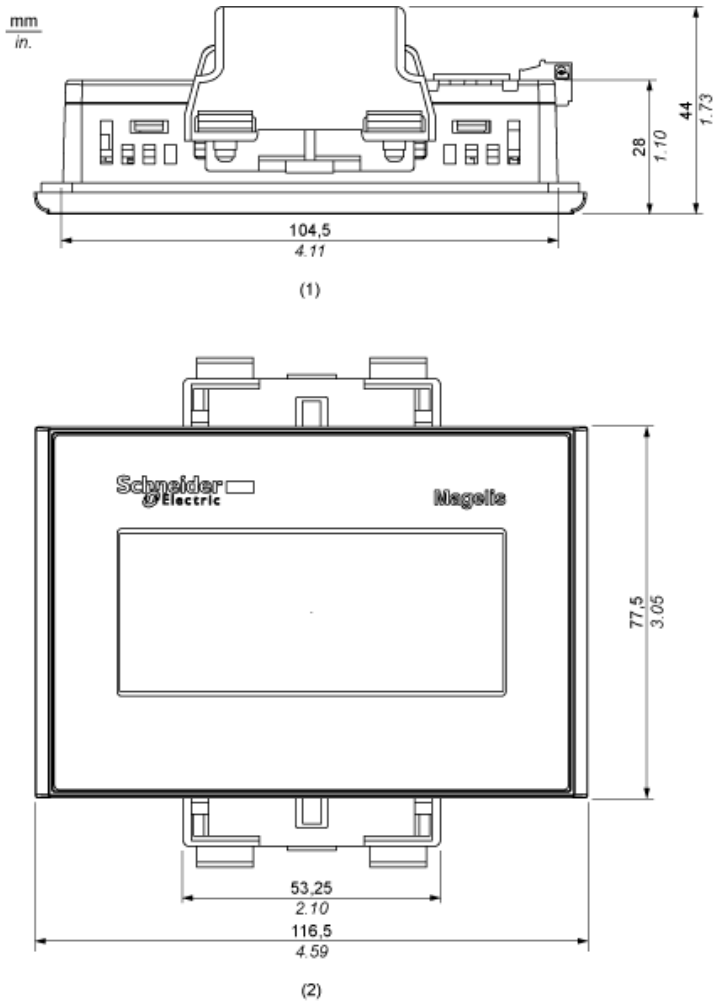

(1) Top
(2) Front

Dimensions without Spring Clips

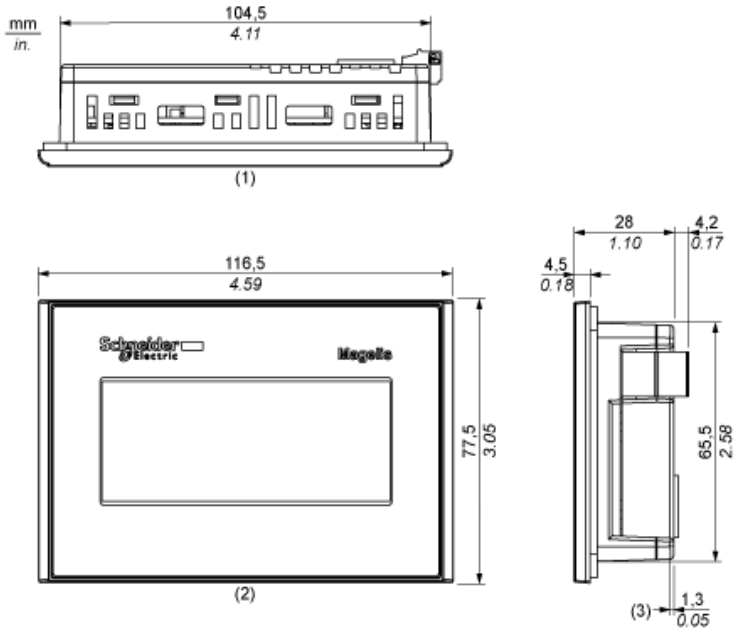

(1) Top
(2) Front
(3) Right Side

Clearance

mm
in.

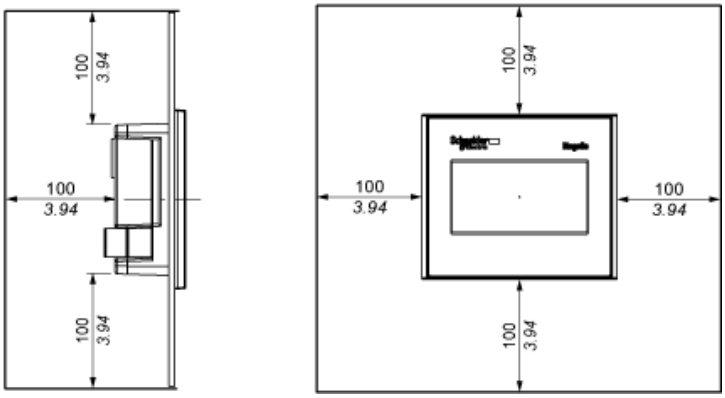

Panel Cut-out Dimensions

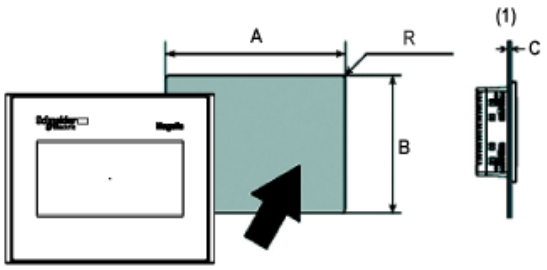

(1) Panel

A (mm)	A (in.)	B (mm)	B (in.)	C (mm) Spring Clips	C (in.) Spring Clips	R (mm)	R (in.)
+1 105 -0	+0.04 4.13 -0	+1 66 -0	+0.04 2.59 -0	1.5 to 6.0	0.059 to 0.236	2.0 to 3.0	0.078 to 0.118