Product data sheet
Characteristics

TSX3705028DR1
TSX Micro 37 05/08 PLC configurations



Main

Range of product	Modicon TSX Micro automation platform
Product or component type	Modular base controller
Primary voltage	100...240 V 90…264 V AC
Number output current	0.5 A

Complementary

Module type	Screw terminal discrete I/O
Discrete output type	12 relay
Integrated connection type	1 serial link Uni-Telway 19.2 kbit/s 1 Modbus Modbus RTU 19.2 kbit/s
Memory description	Internal RAM 11 Kwords data Flash 12 Kwords data
Maximum size of object areas	128 %KWi constant words 256 %Mi 1 %MWi internal words
Execution time per instruction	0.25 µs Boolean without PCMCIA card 4.81 µs arithmetic REAL floating without PCMCIA card
Program characteristics	3.03 100 % Boolean without PCMCIA card 0.25 65 % Boolean and 35 % numerical without PCMCIA card
Application structure	8 event tasks 1 master task 1 fast task
Protection type	Overload protection Short-circuit
Network frequency	50...60 Hz
Electromagnetic compatibility	Electrostatic discharge IEC 1000-4-2 level 3 Electromagnetic field immunity test IEC 1000-4-3 level 3 Resistance to fast transient IEC 1000-4-4 level 3 Immunity to impulse waves IEC 1000-4-5 Damped oscillatory wave IEC 1000-4-12 Immunity to electromagnetic interference IEC 61131-2

Environment

Condition of use	10…95 % without condensation for operation 5…95 % without condensation for operation
Operating altitude	0...6561.68 ft (0...2000 m)

Ordering and shipping details

Category	22556 - TSX MICRO, PL7 MICRO & ACCESS
Discount Schedule	PC14
GTIN	00785901369653
Nbr. of units in pkg.	1
Package weight(Lbs)	4.37 lb(US) (1.98 kg)
Returnability	No
Country of origin	FR

The information provided in this documentation contains general descriptions and/or technical characteristics of the performance of the products contained herein.
This documentation is not intended as a substitute for and is not to be used for determining suitability or reliability of these products for specific user applications.
It is the duty of any such user or integrator to perform the appropriate and complete risk analysis, evaluation and testing of the products with respect to the relevant specific application or use thereof.
Neither Schneider Electric Industries SAS nor any of its affiliates or subsidiaries shall be responsible or liable for misuse of the information contained herein.

Packing Units

Unit Type of Package 1	PCE
Package 1 Height	6.10 in (15.5 cm)
Package 1 width	6.50 in (16.5 cm)
Package 1 Length	7.09 in (18 cm)
Unit Type of Package 2	S04
Number of Units in Package 2	6
Package 2 Weight	25.91 lb(US) (11.754 kg)
Package 2 Height	11.81 in (30 cm)
Package 2 width	15.75 in (40 cm)
Package 2 Length	23.62 in (60 cm)

Offer Sustainability

California proposition 65	WARNING: This product can expose you to chemicals including: Lead and lead compounds which is known to the State of California to cause Carcinogen & Reproductive harm. For more information go to www.p65warnings.ca.gov
EU RoHS Directive	Not applicable, out of EU RoHS legal scope
China RoHS Regulation	China RoHS Declaration
WEEE	The product must be disposed on European Union markets following specific waste collection and never end up in rubbish bins.

Contractual warranty

Warranty	18 months

Dimensions

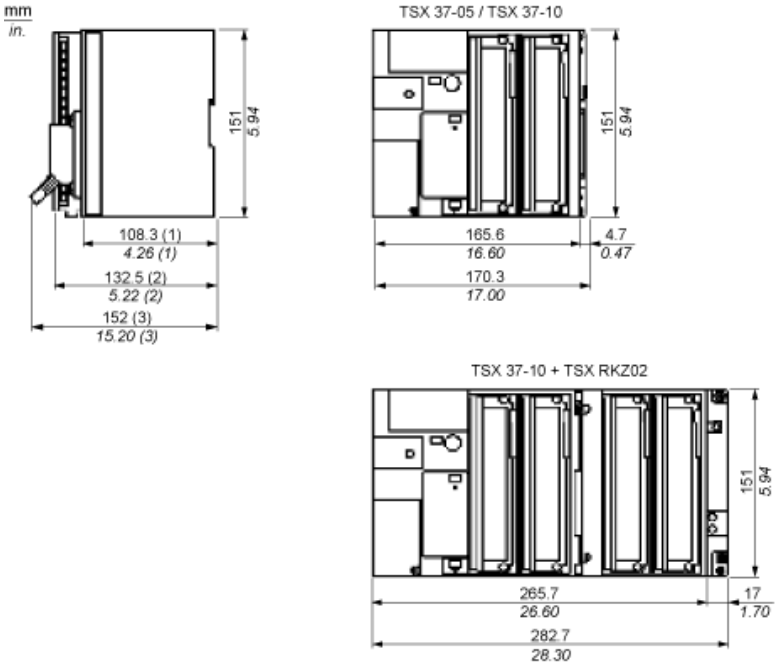

(1) PLC empty.
(2) With screw terminal block.
(3) With HE10 or SubD connector.

TSX3705028DR1

Spacing Requirements

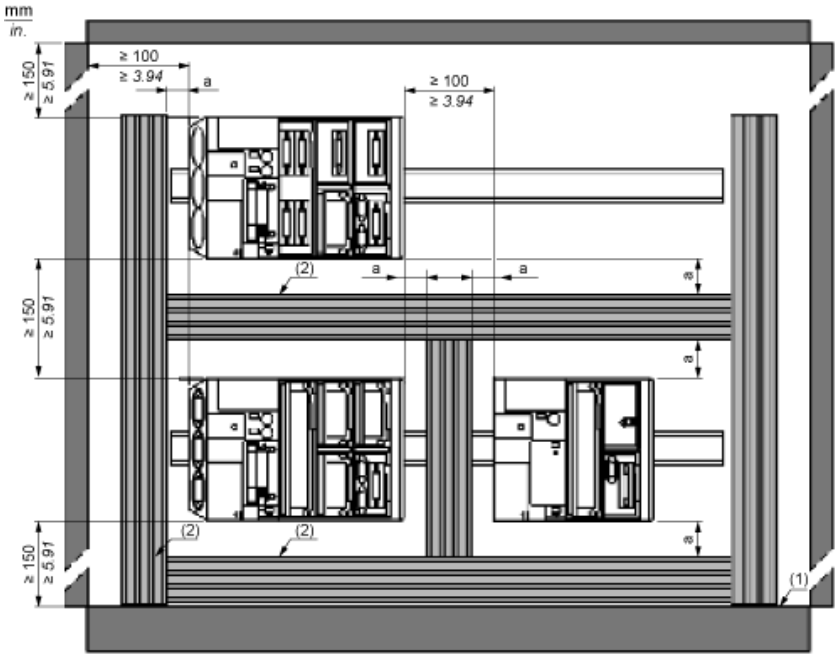

a 50 mm/1.97 in. minimum
(1) Installation or casing
(2) Trough or cable tray

Panel/Board Mounting

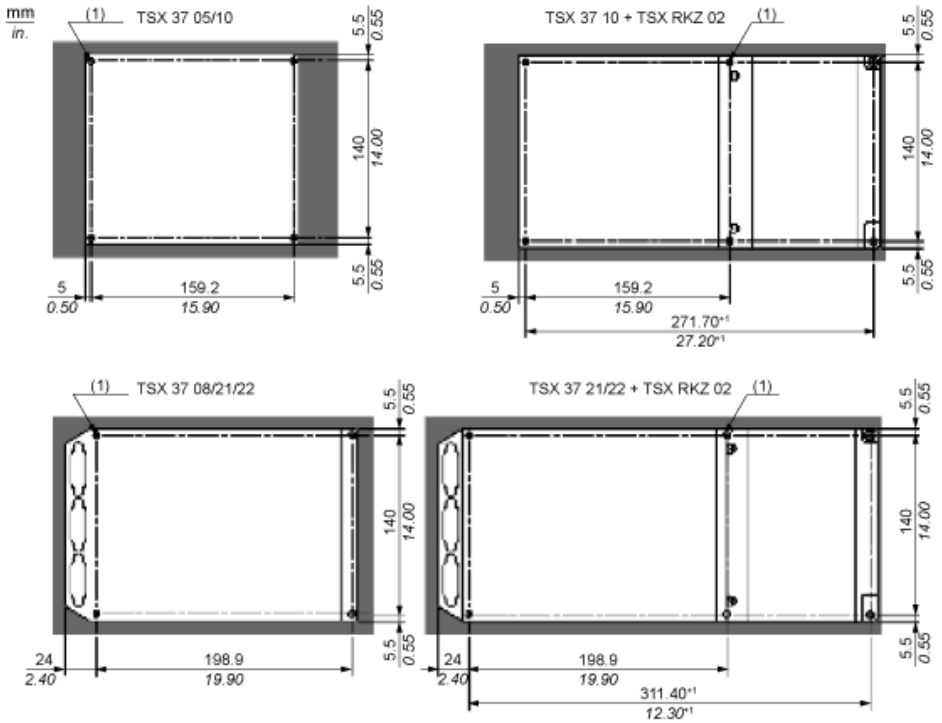

(1) The diameter of the fixing holes must be sufficient to take M4 screws.

Side View

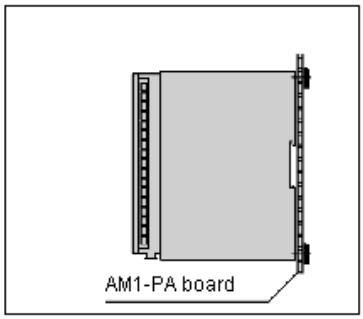

Use 4 screws with M4x16AF1-VA416 captive washers and 4 M4 AF1-EA4 clip nuts.