Product data sheet

Specifications



Prewired rotating mirror beacon, Harmony XVR, 130mm, red, without buzzer, 24V DC

XVR13B04

Main

Range of product	Harmony XVR
Product or component type	Prewired rotating mirror beacon
Sound signalling	Without
Device short name	XVR
Mounting diameter	130 mm
IP degree of protection	IP66 (resistant to vibration) conforming to IEC 60529
[Us] rated supply voltage	24 V DC
Light source	High luminosity LED, red

Complementary

Material	ABS (acrylonitrile butadiene-styrene): body part PC: globe
CAD overall width	130 mm
CAD overall depth	130 mm
Net weight	0.8 kg
Marking	CE
Product mounting	By 3 M8 screws
Supply voltage limits	19…30 V DC
[Uimp] rated impulse withstand voltage	0.8 kV
Current consumption	125 mA
Flashing frequency	2.7 Hz
Clamping connection capacity	1.25 mm²
AWG gauge	AWG 18
Cable length	400 mm

Environment

Standards	IEC 61000-6-2 IEC 61000-6-4
Protective treatment	TC
Ambient air temperature for storage	-35…70 °C
Ambient air temperature for operation	-30…50 °C
Electrical shock protection class	Class II conforming to IEC 61140

Disclaimer: This documentation is not intended as a substitute for and is not to be used for determining suitability or reliability of these products for specific user applications

Packing Units

Unit Type of Package 1	PCE
Number of Units in Package 1	1
Package 1 Height	18.7 cm
Package 1 Width	18.7 cm
Package 1 Length	26.6 cm
Package 1 Weight	1.214 kg
Unit Type of Package 2	S04
Number of Units in Package 2	6
Package 2 Height	30.0 cm
Package 2 Width	40.0 cm
Package 2 Length	60.0 cm
Package 2 Weight	8.488 kg

Contractual warranty

Warranty	18 months

Environmental Data

Schneider Electric aims to achieve Net Zero status by 2050 through supply chain partnerships, lower impact materials, and circularity via our ongoing “Use Better, Use Longer, Use Again” campaign to extend product lifetimes and recyclability.

Environmental Data explained >

How we assess product sustainability >

Environmental footprint

Total lifecycle Carbon footprint	18
Environmental Disclosure	Product Environmental Profile

Use Better

Materials and Substances

Packaging made with recycled cardboard	Yes
Packaging without single use plastic	No
EU RoHS Directive	Pro-active compliance (Product out of EU RoHS legal scope)
California proposition 65	WARNING: This product can expose you to chemicals including: Lead and lead compounds, which is known to the State of California to cause cancer and birth defects or other reproductive harm. For more information go to www.P65Warnings.ca.gov

Use Again

Repack and remanufacture

End of life manual availability	End of Life Information
Take-back	No

Dimensions Drawings

Rotating Mirror Beacon

Dimensions

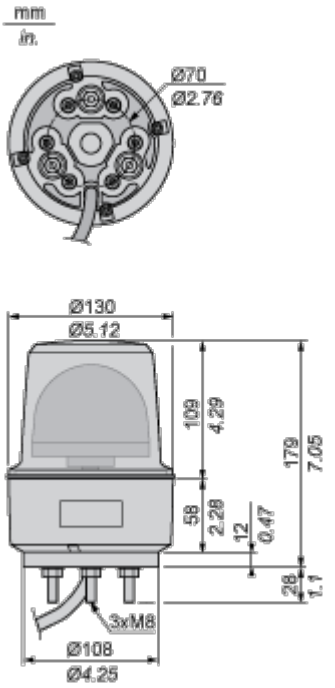

Mounting and Clearance

Rotating Mirror Beacon

Panel Cut-out

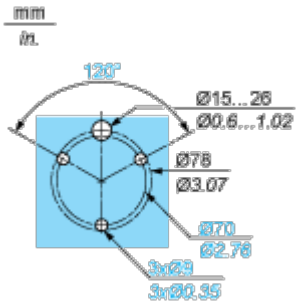

Technical Illustration

Dimensions

