Product data sheet

Specifications



counter module, Modicon M340, high speed, 8 channels

BMXEHC0800

Product availability: Stock - Normally stocked in distribution facility

Main

Range of Product	Modicon M340 automation platform
Product or Component Type	Counter module
Number of channels	8
Maximum counting frequency	10000 Hz
Number of inputs	2 single mode) 3 special dual phase mode)
Input compatibility	19.2…30 V 2-wire/3-wire proximity sensor incremental encoder with push-pull outputs, 10...30 V totem pole
Input voltage	24 V DC type 3

Complementary

Counter functions	Up/down counter 32-bit counter counting Frequency meter Loop (modulo) counting Count events Down counting
Cycle time	5 ms
Isolation voltage	1500 V 60 s
Input type	High speed
Input voltage limits	24 V DC
Input current	4.5 mA
Voltage state 1 guaranteed	11...30 V DC
Current state 1 guaranteed	> 2 mA (for U >= 11V)
Voltage state 0 guaranteed	< 5 V DC
Current state 0 guaranteed	< 1.5 mA
Electrical connection	1 connector 20 pins
Current consumption	200 mA 3.3 V DC bus 80 mA 24 V DC sensor
Module format	Standard
Product Weight	0.249 lb(US) (0.113 kg)

Environment

Ambient Air Temperature for Operation	32…140 °F (0…60 °C)
Relative Humidity	10…95 % without condensation
IP Degree of Protection	IP20

Price is “List Price” and may be subject to a trade discount – check with your local distributor or retailer for actual price.

Disclaimer: This documentation is not intended as a substitute for and is not to be used for determining suitability or reliability of these products for specific user applications

Directives	2014/35/EU - low voltage directive 2014/30/EU - electromagnetic compatibility
Protective treatment	Standard version

Ordering and shipping details

Category	US1PC3418160
Discount Schedule	PC34
GTIN	3595863910131
Returnability	Yes
Country of origin	US

Packing Units

Unit Type of Package 1	PCE
Nbr. of units in pkg.	1
Package 1 Height	2.05 in (5.2 cm)
Package 1 Width	4.3 in (11.0 cm)
Package 1 Length	4.6 in (11.8 cm)
Package weight(Lbs)	5.04 oz (143.0 g)
Unit Type of Package 2	S02
Number of Units in Package 2	15
Package 2 Height	5.9 in (15.0 cm)
Package 2 Width	11.8 in (30.0 cm)
Package 2 Length	15.7 in (40.0 cm)
Package 2 Weight	5.27 lb(US) (2.39 kg)

Contractual warranty

Warranty (in months)	18

Environmental Data

Schneider Electric aims to achieve Net Zero status by 2050 through supply chain partnerships, lower impact materials, and circularity via our ongoing “Use Better, Use Longer, Use Again” campaign to extend product lifetimes and recyclability.

Environmental Data explained >

How we assess product sustainability >

Environmental footprint

Total lifecycle Carbon footprint	**102 kg CO2 eq.**
Carbon footprint of the manufacturing phase [A1 to A3]	**18 kg CO2 eq.**
Carbon footprint of the distribution phase [A4]	**0 kg CO2 eq.**
Carbon footprint of the installation phase [A5]	**0 kg CO2 eq.**
Carbon footprint of the use phase [B2, B3, B4, B6]	**83 kg CO2 eq.**
Carbon footprint of the end-of-life phase [C1 to C4]	**0.3 kg CO2 eq.**
Environmental Disclosure	Product Environmental Profile

Use Better

Materials and Substances

Packaging made with recycled cardboard	**Yes**
Packaging without single use plastic	**Yes**
EU RoHS Directive	Compliant By Exemption
REACh Regulation	Reference contains Substances of Very High Concern above the threshold
California proposition 65	**WARNING: This product can expose you to chemicals including: Lead and lead compounds, which is known to the State of California to cause cancer and birth defects or other reproductive harm. For more information go to www.P65Warnings.ca.gov**

Use Longer

Lifetime extension

Repair	**No**

Use Again

Repack and remanufacture

Recyclability potential, in %	**3**
Circularity Profile	End of Life Information
Take-back	**No**

Dimensions Drawings

Modules Mounted on Racks

Dimensions

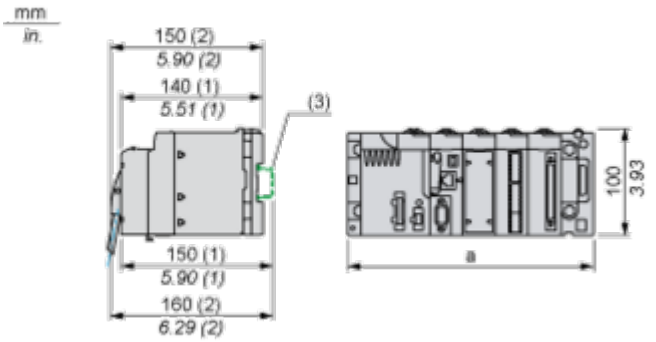

(1) With removable terminal block (cage, screw or spring).
(2) With FCN connector.
(3) On AM1 ED rail: 35 mm wide, 15 mm deep. Only possible with BMXXBP0400/0400H/0600/0600H/0800/0800H rack.

Rack references	a in mm	a in in.
BMXXBP0400 and BMXXBP0400H	242.4	09.54
BMXXBP0600 and BMXXBP0600H	307.6	12.11
BMXXBP0800 and BMXXBP0800H	372.8	14.68
BMXXBP1200 and BMXXBP1200H	503.2	19.81

Connections and Schema

Counting Module Wiring

Pin Assignments

IN_A input for channel 0	2	1	IN_AUX input for channel 0
IN_A input for channel 1 or IN_B input for channel 0	4	3	IN_AUX input for channel 1
IN_A input for channel 2	6	5	IN_AUX input for channel 2
IN_A input for channel 3 or IN_B input for channel 2	8	7	IN_AUX input for channel 3
IN_A input for channel 4	10	9	IN_AUX input for channel 4
IN_A input for channel 5 or IN_B input for channel 4	12	11	IN_AUX input for channel 5
IN_A input for channel 6	14	13	IN_AUX input for channel 6
IN_A input for channel 7 or IN_B input for channel 6	16	15	IN_AUX input for channel 7
VDC + power supply for sensors	18	17	Return + 24 V power supply for sensors
Functional earth, for shield continuation	20	19	Functional earth, for shield continuation

Sensor Connection Example

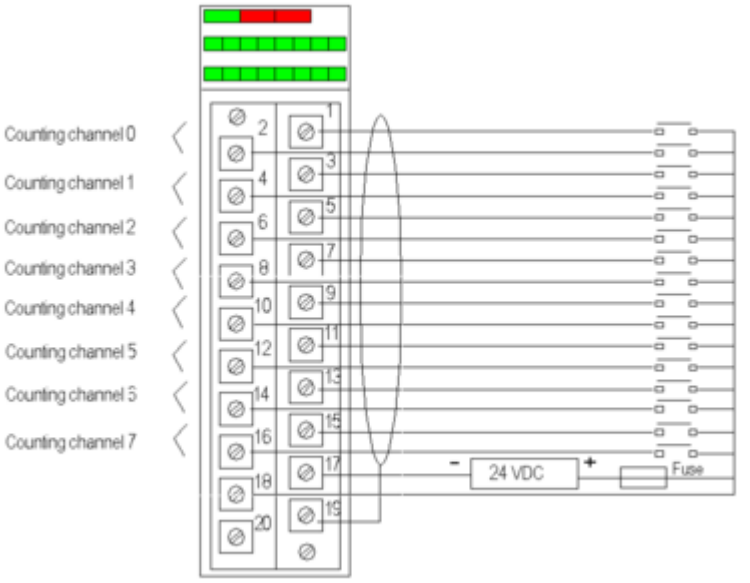

Incremental Encoder Connection Example for Axis Control

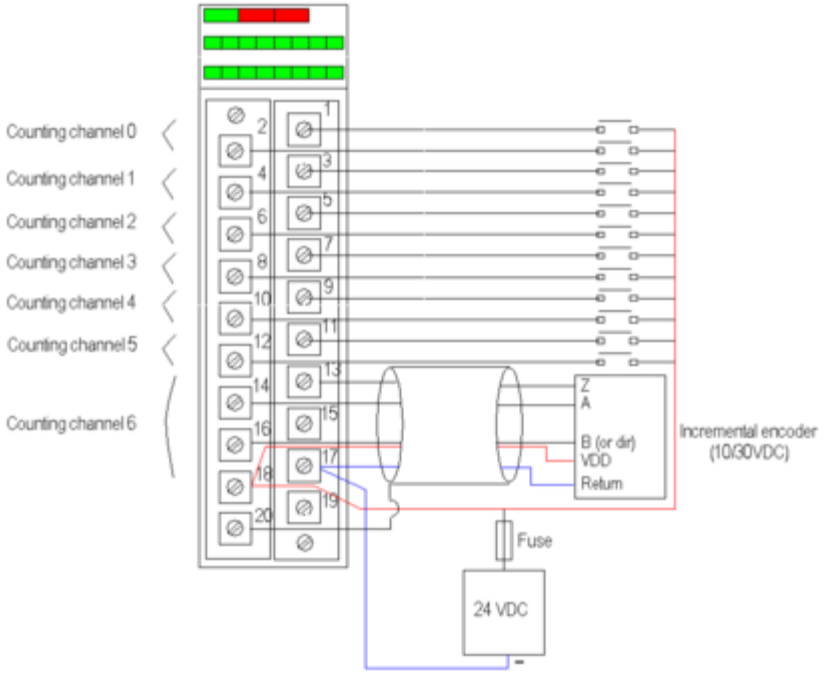

Channels 0 to 5 are still used in single mode.
Channel 7 is no longer available.

Recommended Circuit for a Highly Disturbed Environment Using BMXXSP•••• Electromagnetic Protection Kit

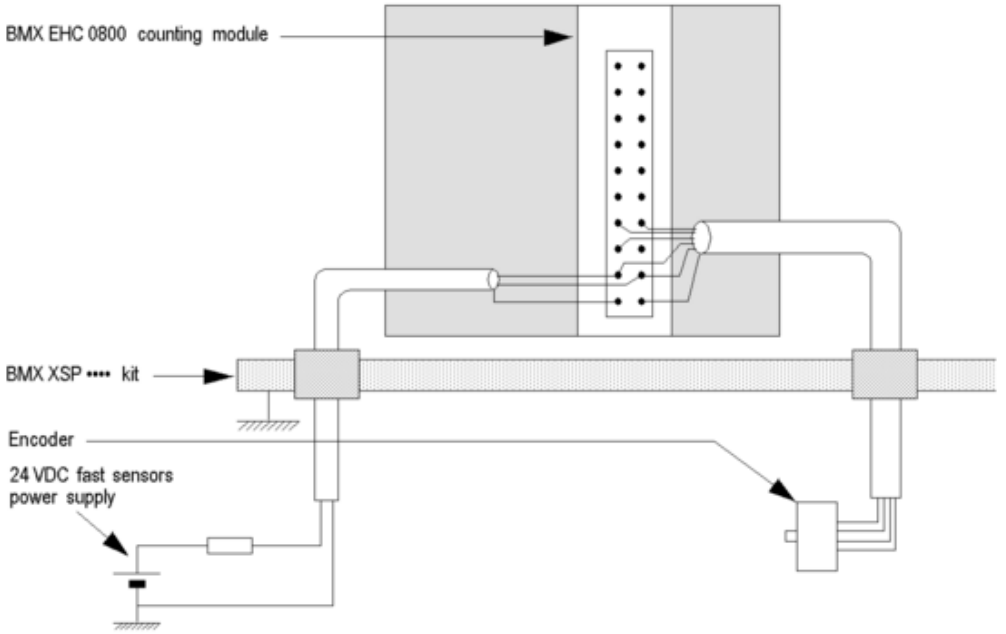

Image of product / Alternate images

Alternative








Schneider
Electric
Modicon
BMXEHC0800
HIGH SPEED COUNTER 8 CH
DOM : XXXX


SN:XXXXXXXXXXX
PV:XX SV:XX RL:XX

