Product data sheet

Specifications



To be discontinued

digital input kit, Modicon STB, standard, 24V DC, 4 I

STBDDI3420K

To be discontinued on: Dec 1, 2027

To be end-of-service on: Dec 31, 2035

Product availability: Non-Stock - Not normally stocked in distribution facility

Main

Range of Product	Modicon STB distributed I/O solution
Product or Component Type	Standard digital input kit
Kit composition	STBXTS2100, 6-terminal spring clamp connector STBDDI3420 module STBXTS1100, 6-terminal screw type connector STBXBA1000 base
Product Compatibility	I/O base STBXBA1000 Power distribution module STBPDT3100/3105
Discrete input number	4
Discrete input voltage	11...30 Vtype 1 - 3...5 V
Discrete input logic	Positive or negative

Complementary

Discrete input compatibility	4 type 1 at 24 V DC
Discrete input current	8 mA at 24 V DC
Voltage state 1 guaranteed	At state 1 11...30 V
Voltage state 0 guaranteed	-3...5 V at state 0
Current state 1 guaranteed	>= 2.5 mA
Current state 0 guaranteed	<= 1.2 mA
Response time on input	0.925 ms (off to on) 1.35 ms (on to off)
Input filtering	1 ms 2 ms 4 ms 8 ms 0.5 ms 16 ms 0.2 ms
Input protection type	Input protection resistor-limited Reverse polarity protection
Current supplied by sensor	50 mA per channel
Power supply type	Power distribution module
Typical current consumption	45 mA 5 V DC for logic bus
Electrical Connection	Screw terminal

Price is “List Price” and may be subject to a trade discount – check with your local distributor or retailer for actual price.

Disclaimer: This documentation is not intended as a substitute for and is not to be used for determining suitability or reliability of these products for specific user applications

Local signalling	1 LED (green) for module status (RDY) 1 LED per channel (green) for channel status (IN1 to IN2) 1 LED (red) for module error (ERR)
Height	0.7 in (18.4 mm)
Width	4.9 in (125 mm)
Depth	2.6 in (65.1 mm)
Product Weight	0.245 lb(US) (0.111 kg)

Environment

IP Degree of Protection	IP20
Marking	CE
Product certifications	CSA FM Class 1 Division 2 UL
Standards	IEC 61131-2 Type 1
Ambient air temperature for operation	-13…158 °F (-25…70 °C) without derating)
Ambient air temperature for storage	-40…185 °F (-40…85 °C) without derating
Relative humidity	95 % 140 °F (60 °C) without condensation
Operating altitude	<= 6561.68 ft (2000 m)
Pollution degree	2
Vibration resistance	3 gn 58…150 Hz) on 35 mm DIN rail 5 gn 58…150 Hz) on 35 mm DIN rail +/- 3.5 mm 10…58 Hz)
Shock resistance	30 gn 11 msIEC 88 reference 2-27

Ordering and shipping details

Category	US1PC3218215
Discount Schedule	PC32
GTIN	3595863948905
Returnability	No
Country of origin	ID

Packing Units

Unit Type of Package 1	PCE
Nbr. of units in pkg.	1
Package 1 Height	1.0 in (2.5 cm)
Package 1 Width	3.1 in (8.0 cm)
Package 1 Length	5.1 in (13.0 cm)
Package weight(Lbs)	4.6 oz (131.0 g)
Unit Type of Package 2	S02
Number of Units in Package 2	28
Package 2 Height	5.9 in (15.0 cm)
Package 2 Width	11.8 in (30.0 cm)
Package 2 Length	15.7 in (40.0 cm)

Package 2 Weight	9.026 lb(US) (4.094 kg)
Unit Type of Package 3	PAL
Number of Units in Package 3	448
Package 3 Height	23.6 in (60.0 cm)
Package 3 Width	31.5 in (80.0 cm)
Package 3 Length	176.4 in (448.0 cm)
Package 3 Weight	131.360 lb(US) (59.584 kg)

Contractual warranty

Warranty (in months)	18

Environmental Data

Schneider Electric aims to achieve Net Zero status by 2050 through supply chain partnerships, lower impact materials, and circularity via our ongoing “Use Better, Use Longer, Use Again” campaign to extend product lifetimes and recyclability.

Environmental Data explained >

How we assess product sustainability >

Use Better

Materials and Substances

Packaging made with recycled cardboard	**No**
Packaging without single use plastic	**No**
SCIP Number	**6830dd70-e4bc-47df-85c7-e41f888576f4**
EU RoHS Directive	**Compliant By Exemption**
REACh Regulation	**Reference contains Substances of Very High Concern above the threshold**
California proposition 65	**WARNING: This product can expose you to chemicals including: Lead and lead compounds, which is known to the State of California to cause cancer and birth defects or other reproductive harm. For more information go to www.P65Warnings.ca.gov**

Use Longer

Lifetime extension

Repair	**No**

Use Again

Repack and remanufacture

Take-back	**No**

Dimensions Drawings

Dimensions

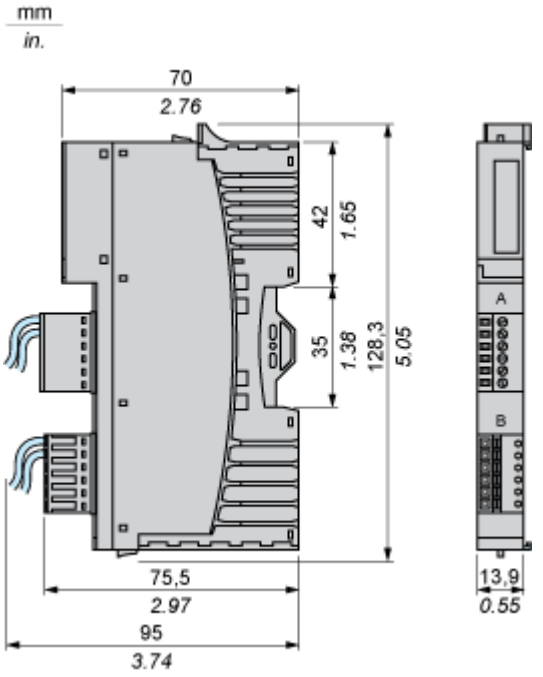

Connections and Schema

Wiring Diagram

Example

2 three-wire sensor and 2 two-wire sensor

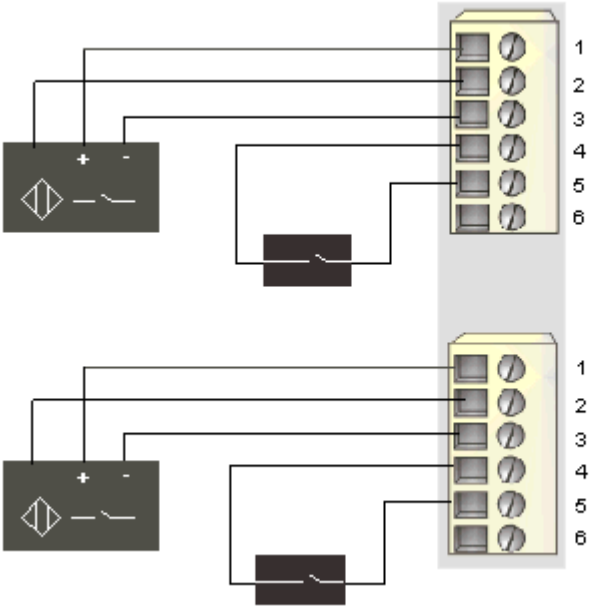

Pin	Top Connector	Bottom Connector
1	+24 VDC from sensor bus for field device accessories	+24 VDC from sensor bus for field device accessories
2	input from sensor 1	input from sensor 3
3	field power return (to the module)	field power return (to the module)
4	+24 VDC from sensor bus for field device accessories	+24 VDC from sensor bus for field device accessories
5	input from sensor 2	input from sensor 4
6	field power return (to the module)	field power return (to the module)