Product data sheet

Specifications



To be discontinued

standard power distribution kit STB - 115..230 V AC

STBPDT2100K

To be discontinued on: Dec 1, 2027

To be end-of-service on: Dec 31, 2035

Product availability: Stock - Normally stocked in distribution facility

Main

Range of Product	Modicon STB distributed I/O solution
Product or Component Type	Standard power distribution kit
Kit composition	STBPDT2100 module STBXBA2200 base STBXTS2130, spring type connectors STBXTS1130, screw type connectors
Product Compatibility	Mounting base STBXBA2200
[Us] rated supply voltage	115...230 V AC
Power supply output current	0…10 A output circuit 0…2.5 A input circuit 0…5 A input circuit 0…5 A output circuit

Complementary

Supply frequency	50...60 Hz
Voltage range	85...265 V AC sensor/actuator bus
Protection type	Built-in overcurrent protection, 10 A time-lag output circuit Built-in overcurrent protection, 5 A time-lag input circuit
Permissible current	30 A for 2 minutes grounding terminal
Voltage detection threshold	< 50 V +/-5 AC IN/OUT LED non lit > 70 V +/-5 AC IN/OUT LED lit
Hot swapping fallback	No
Protection Type	Overcurrent protection
Local signalling	1 LED green actuator bus power supply (OUT) 1 LED green sensor bus power supply (IN)
Housing Colour	White
Height	0.7 in (18.4 mm)
Width	4.9 in (125 mm)
Depth	2.6 in (65.1 mm)
Product Weight	0.284 lb(US) (0.129 kg)
Overvoltage category	II

Environment

IP Degree of Protection	IP20

Price is “List Price” and may be subject to a trade discount – check with your local distributor or retailer for actual price.

Disclaimer: This documentation is not intended as a substitute for and is not to be used for determining suitability or reliability of these products for specific user applications

Marking	CE
Product certifications	CSA FM Class 1 Division 2 UL
Standards	EN/IEC 61131-2 type 1
Ambient air temperature for operation	32…140 °F (0…60 °C) without derating)
Ambient air temperature for storage	-40…185 °F (-40…85 °C) without derating
Relative humidity	95 % 140 °F (60 °C) without condensation
Operating altitude	<= 6561.68 ft (2000 m)
Pollution degree	2
Vibration resistance	3 gn 58…150 Hz) on 35 mm DIN rail 5 gn 58…150 Hz) on 35 mm DIN rail +/-0.35 mm 10…58 Hz)
Shock resistance	30 gn 11 msIEC 88 reference 2-27

Ordering and shipping details

Category	US1PC3218215
Discount Schedule	PC32
GTIN	3595863949186
Returnability	Yes
Country of origin	ID

Packing Units

Unit Type of Package 1	PCE
Nbr. of units in pkg.	1
Package 1 Height	1.063 in (2.700 cm)
Package 1 Width	3.386 in (8.600 cm)
Package 1 Length	5.512 in (14.000 cm)
Package weight(Lbs)	5.220 oz (148.000 g)
Unit Type of Package 2	S02
Number of Units in Package 2	24
Package 2 Height	5.906 in (15.000 cm)
Package 2 Width	11.811 in (30.000 cm)
Package 2 Length	15.748 in (40.000 cm)
Package 2 Weight	8.664 lb(US) (3.930 kg)

Contractual warranty

Warranty (in months)	18

Environmental Data

Schneider Electric aims to achieve Net Zero status by 2050 through supply chain partnerships, lower impact materials, and circularity via our ongoing “Use Better, Use Longer, Use Again” campaign to extend product lifetimes and recyclability.

Environmental Data explained >

How we assess product sustainability >

Use Better

Materials and Substances

Packaging made with recycled cardboard	No
Packaging without single use plastic	Yes
SCIP Number	6830dd70-e4bc-47df-85c7-e41f888576f4
EU RoHS Directive	Compliant By Exemption
REACh Regulation	Reference contains Substances of Very High Concern above the threshold
California proposition 65	WARNING: This product can expose you to chemicals including: Lead and lead compounds, which is known to the State of California to cause cancer and birth defects or other reproductive harm. For more information go to www.P65Warnings.ca.gov

Use Longer

Lifetime extension

Repair	No

Use Again

Repack and remanufacture

Take-back	No

Dimensions Drawings

Dimensions

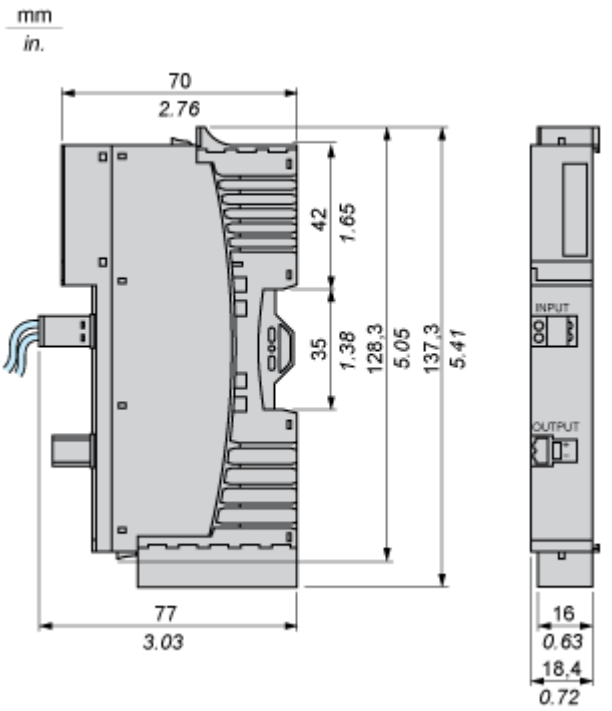

Connections and Schema

Wiring Diagram

Example

Single power supply

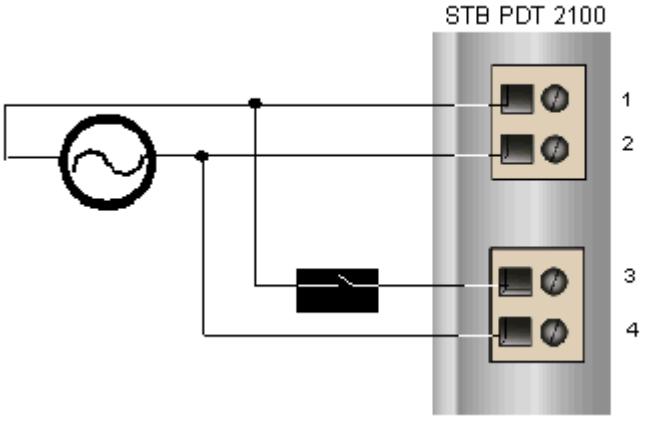

Pin	Top Connector	Bottom Connector
1	+115/230 VAC for the sensor bus	+115/230 VAC for the actuator bus
2	-115/230 VAC sensor power return	-115/230 VAC actuator power return