Product data sheet

Specifications

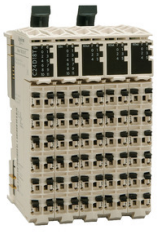

compact I/O expansion block, Modicon TM5, 36 IO, 24 DI, 12 DO relay

TM5C24D12R

Product availability: Non-Stock - Not normally stocked in distribution facility

Main

Range of Product	Modicon TM5
Product or Component Type	Compact I/O expansion block
Discrete input number	24
Discrete input voltage	24 V DC 20.4...28.8 V)
Discrete input logic	Sink
Discrete output number	12
Discrete output logic	Source or sink
Discrete output voltage	30 V DC 24...36 V)relay 240 V AC 184...276 V)AC

Complementary

Enclosure Material	Plastic
Color	White
Input/output number	36
Input/output number of splitter box	24 I + 12 O
Number of modules	Digital input 2 x 12 Relay output 2 x 6
Response time	<= 12 ms from state 0 to state 1 output <= 10 ms from state 1 to state 0 output
Discrete input compatibility	24 at 24 V DC
Discrete input current	3.75 mA at 24 V DC
Voltage state 1 guaranteed	>= 15 V
Voltage state 0 guaranteed	<= 5 V
Input impedance	6.4 kOhm
Input filtering	<= 100 ms hardware <= 25 ms configurable by software
Discrete output number	12 relay at 30 V DC at 240 V AC
Discrete output current	2 A per output
Minimum switching current	10 mA 5 V DC
Mechanical durability	20000000 cycles
Typical current consumption	68 mA 5 V DC 165 mA 24 V DC for inputs/outputs
Electrical Connection	Removable spring terminal block

Price is “List Price” and may be subject to a trade discount – check with your local distributor or retailer for actual price.

Disclaimer: This documentation is not intended as a substitute for and is not to be used for determining suitability or reliability of these products for specific user applications

Power dissipation in W	4.3 W
Isolation between channels	None
Isolation between channels and bus	500 Vrms AC
Local signalling	24 LEDs (green) for input status 4 LEDs (green) for power supply 4 LEDs (red) for power supply 12 LEDs (yellow) for output status
Mounting support	DIN rail
Height	3.9 in (99 mm)
Width	0.5 in (12.5 mm)
Depth	3.0 in (75 mm)
Product Weight	0.57 lb(US) (0.26 kg)

Environment

IP Degree of Protection	IP20
Marking	CE
Product certifications	CULus GOST-R CSA C-tick
Standards	CSA C22.2 No 213 CSA C22.2 No 142 IEC 61131-2 UL 508
Ambient air temperature for operation	14…122 °F (-10…50 °C) vertical installation) 14…140 °F (-10…60 °C) horizontal installation)
Ambient air temperature for storage	-40…158 °F (-40…70 °C)
Relative humidity	5…95 % without condensation
Operating altitude	0...6561.68 ft (0...2000 m)
Pollution degree	2
Vibration resistance	1 gn 8.4…150 Hz) on DIN rail 3.5 mm 5…8.4 Hz) on DIN rail
Shock resistance	15 gn 11 ms

Ordering and shipping details

Category	US1PC1222532
Discount Schedule	PC12
GTIN	3595864074382
Returnability	No
Country of origin	AT

Packing Units

Unit Type of Package 1	PCE
Nbr. of units in pkg.	1
Package 1 Height	2.717 in (6.900 cm)
Package 1 Width	3.622 in (9.200 cm)
Package 1 Length	4.331 in (11.000 cm)

Package weight(Lbs)	10.194 oz (289.000 g)
Unit Type of Package 2	S03
Number of Units in Package 2	36
Package 2 Height	11.811 in (30.000 cm)
Package 2 Width	11.811 in (30.000 cm)
Package 2 Length	15.748 in (40.000 cm)
Package 2 Weight	23.856 lb(US) (10.821 kg)

Contractual warranty

Warranty (in months)	18

Environmental Data

Schneider Electric aims to achieve Net Zero status by 2050 through supply chain partnerships, lower impact materials, and circularity via our ongoing “Use Better, Use Longer, Use Again” campaign to extend product lifetimes and recyclability.

Environmental Data explained >

How we assess product sustainability >

Environmental footprint

Total lifecycle Carbon footprint	**83 kg CO2 eq.**
Carbon footprint of the manufacturing phase [A1 to A3]	**1 kg CO2 eq.**
Carbon footprint of the distribution phase [A4]	**0 kg CO2 eq.**
Carbon footprint of the installation phase [A5]	**0 kg CO2 eq.**
Carbon footprint of the use phase [B2, B3, B4, B6]	**82 kg CO2 eq.**
Carbon footprint of the end-of-life phase [C1 to C4]	**0.1 kg CO2 eq.**

Use Better

Materials and Substances

Packaging made with recycled cardboard	**No**
Packaging without single use plastic	**Yes**
EU RoHS Directive	**Compliant By Exemption**
REACh Regulation	**Free of Substances of Very High Concern above the threshold**
California proposition 65	**WARNING: This product can expose you to chemicals including: Lead and lead compounds, which is known to the State of California to cause cancer and birth defects or other reproductive harm. For more information go to www.P65Warnings.ca.gov**
PVC free	**Yes**

Use Longer

Lifetime extension

Repair	**No**

Use Again

Repack and remanufacture

Recyclability potential, in %	**1**
Circularity Profile	**End of Life Information**
Take-back	**No**
WEEE Label	**The product must be disposed on European Union markets following specific waste collection and never end up in rubbish bins.**

Presentation

TM5 Compact I/O Module

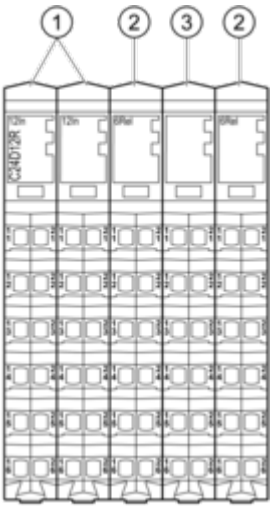

N°	Designation
1	Input electronic module / 12 digital inputs
2	Relay output electronic module / 6 relay outputs
3	Dummy module

Dimensions Drawings

Compact I/O Module

Dimensions

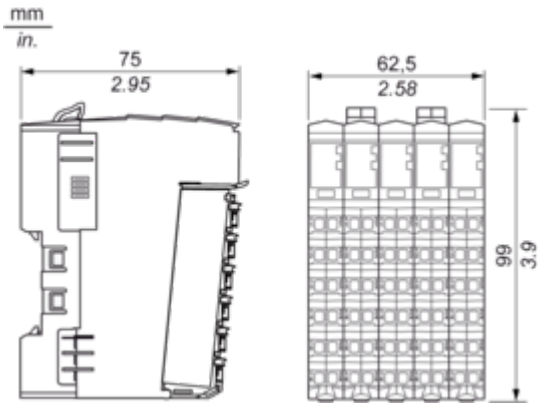

Mounting and Clearance

TM5 System

Spacing Requirements

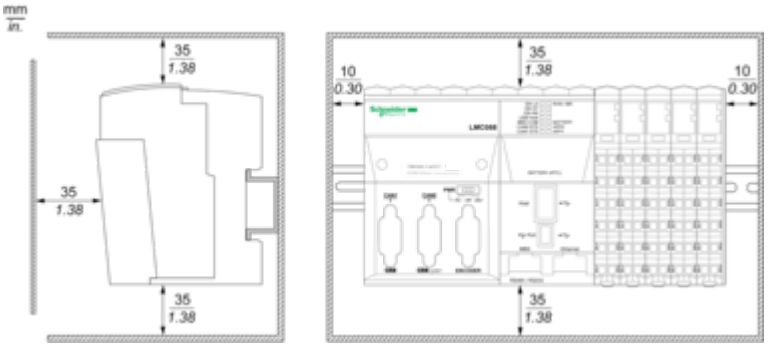

Mounting on a DIN Rail

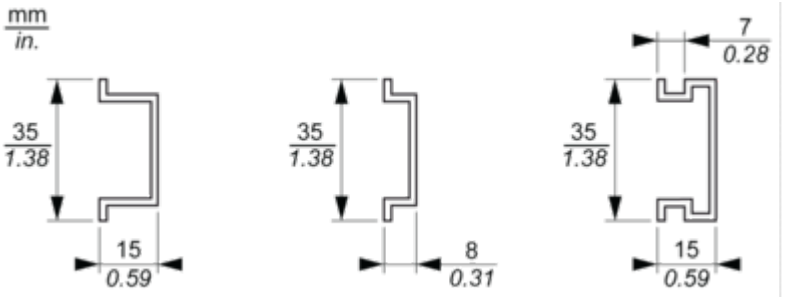

Connections and Schema

TM5 System Wiring Recommendations

Wire Sizes to Use with the Removable Spring Terminal Blocks

mm / in. 9 / 0.35				
mm^2	0,08...2,5	0,25...2,5	0,25...1,5	2 x 0,25...2 x 0,75
AWG	28...14	24...14	24...16	2 x 24...2 x 18

Digital Input 12In

Wiring Diagram

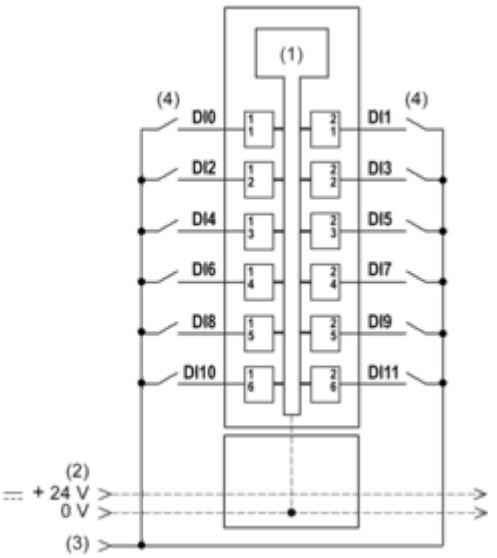

1 Internal electronics
2 24 Vdc I/O power segment integrated into the bus bases
3 24 Vdc I/O power segment by external connection
4 2-wire sensor

Digital Output Relay 6Rel

Wiring Diagram

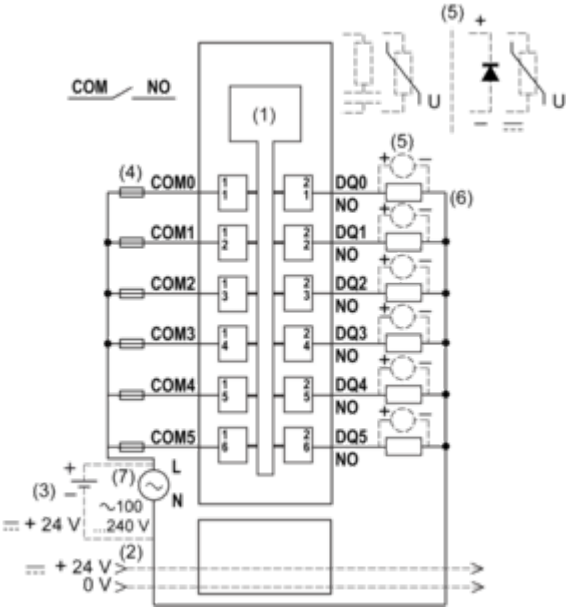

1 Internal electronics
2 24 Vdc I/O power segment integrated into the bus bases
3 External isolated power supply 24 Vdc
4 External fuse type T slow-blow 2 A 250 V
5 Inductive load protection
6 2-wire load
7 External power supply 100...240 Vac

Dummy Module

Wiring Diagram

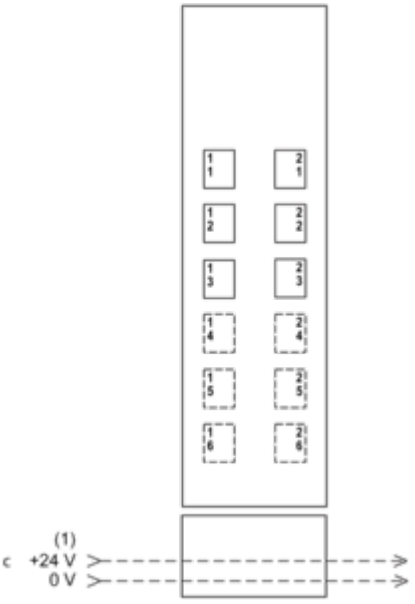

1 24 Vdc I/O power segment integrated into the bus bases

Performance Curves

Digital Output Relay Electronic Module

Electric Durability

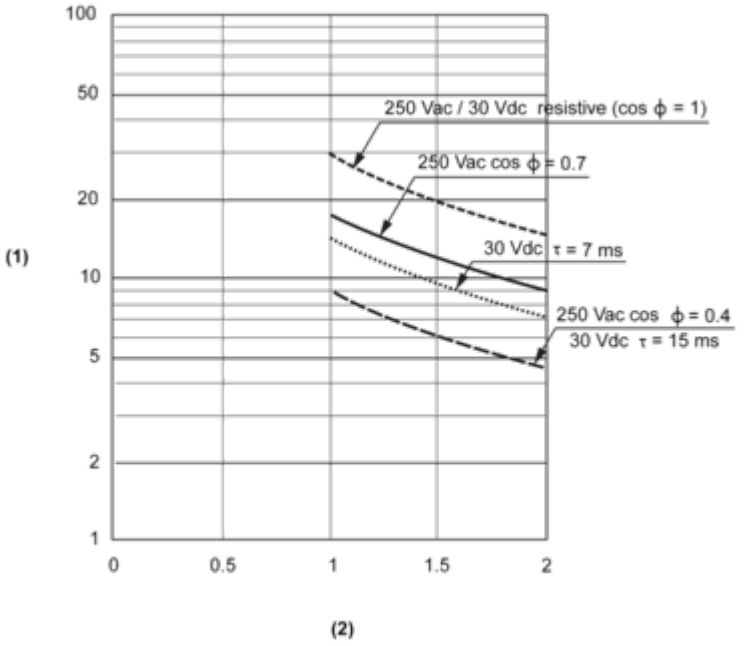

1 Switching procedures ($x10^4$)
2 Switching current in A