Product data sheet

Specifications



Control station, Harmony XALK, plastic, yellow lid, 1 red mushroom push button 40mm, key release, 1NC, unmarked

XALK188H7

Product availability: Stock - Normally stocked in distribution facility

Main

Range of Product	Harmony XALK
Product or Component Type	Complete control station
Device short name	XALK
Product destination	For XB5 Ø 22 mm control and signalling units
Control station application	Emergency stop function Emergency switching off function
Colour of base of enclosure	Light grey RAL 7035)
Colour of cover	Yellow RAL 1021)
Material	Polycarbonate
Operator profile	1 mushroom head push-button
Operators description	Red unmarked 1 NC
Reset	Key release
Control station composition	1 mushroom head Ø 40 mm push-button, red 1 NC unmarked
Contact operation	Slow-break

Complementary

AC control voltage 50 HZ	120…600 V
Cable entry	1 knock-out for cable entry 0…0.6 in (0…14 mm) 2 knock-outs for Pg 13 cable gland and ISO M20 0…0.5 in (0…12 mm)
AC control voltage 60 HZ	120…600 V
Product Weight	0.414 lb(US) (0.188 kg)
DC control voltage	125…600 V
Resistance to high pressure washer	1015.3 psi (7000000 Pa) 131 °F (55 °C) 0.1 m
Number of command positions	1
Number of indicator lights	0
Key number	455
Number of push buttons	0
Positive opening	With IEC 60947-5-1 appendix K
Operating travel	0.06 in (1.5 mm) NC changing electrical state) 0.2 in (4.3 mm) total travel)
Operating force	44 N
Number of selector switches	0

Price is “List Price” and may be subject to a trade discount – check with your local distributor or retailer for actual price.

Disclaimer: This documentation is not intended as a substitute for and is not to be used for determining suitability or reliability of these products for specific user applications

Mechanical durability	300000 cycles
Connections - terminals	Screw clamp terminals, <= 2 x 1.5 mm² with cable end IEC 60947-1 Screw clamp terminals, >= 1 x 0.22 mm² without cable end IEC 60947-1
Number of key switches	0
Tightening torque	7.08…10.6 lbf.in (0.8…1.2 N.m) IEC 60947-1
Shape of screw head	Cross Philips no 1 Cross pozidriv No 1 Slotted flat Ø 4 mm Slotted flat Ø 5.5 mm
Contacts material	Silver alloy (Ag/Ni)
Short-circuit protection	10 A cartridge fuse gG IEC 60947-5-1
[Ith] conventional free air thermal current	10 A IEC 60947-5-1
Number of mushroom-shaped push-buttons	1
[Ui] rated insulation voltage	600 V 3)IEC 60947-1
[Uimp] rated impulse withstand voltage	6 kV IEC 60947-1
[Ie] rated operational current	3 A 240 V, AC-15, A600 IEC 60947-5-1 6 A 120 V, AC-15, A600 IEC 60947-5-1 0.1 A 600 V, DC-13, Q600 IEC 60947-5-1 0.27 A 250 V, DC-13, Q600 IEC 60947-5-1 0.55 A 125 V, DC-13, Q600 IEC 60947-5-1 1.2 A 600 V, AC-15, A600 IEC 60947-5-1
Electrical durability	1000000 cycles, AC-15, 2 A 230 V 3600 cyc/h 0.5 IEC 60947-5-1 appendix C 1000000 cycles, AC-15, 3 A 120 V 3600 cyc/h 0.5 IEC 60947-5-1 appendix C 1000000 cycles, AC-15, 4 A 24 V 3600 cyc/h 0.5 IEC 60947-5-1 appendix C 1000000 cycles, DC-13, 0.2 A 110 V 3600 cyc/h 0.5 IEC 60947-5-1 appendix C 1000000 cycles, DC-13, 0.5 A 24 V 3600 cyc/h 0.5 IEC 60947-5-1 appendix C
Emergency Power Off (EPO)	No
Electrical reliability	Λ < 10exp(-6) 5 V, 1 mA IEC 60947-5-4 Λ < 10exp(-8) 17 V, 5 mA IEC 60947-5-4
Number of contacts as normally closed contact	1
Number of contacts as normally open contact	0
Number of contacts as change-over contact	0
Housing material	Plastic
Housing Colour	Yellow
colour of cover	Yellow

Environment

Protective treatment	TH
Ambient Air Temperature for Storage	-40…158 °F (-40…70 °C)
Ambient Air Temperature for Operation	-40…158 °F (-40…70 °C)
Overvoltage category	Class II conforming to IEC 60536
IP degree of protection	IP66 IEC 60529 IP67 IP69 IP69K
NEMA degree of protection	NEMA 13 NEMA 4X
IK degree of protection	IK03 conforming to IEC 62262

Standards	IEC 60947-5-1 ISO 13850 JIS C 4520 IEC 60947-5-5 IEC 60947-5-4 CSA C22.2 No 14 UL 508 IEC 60364-5-53 IEC 60947-1 IEC 60204-1
Product Certifications	UL Listed CSA
Vibration resistance	5 gn (f= 12…500 Hz) conforming to IEC 60068-2-6
Shock resistance	30 gn 18 ms) half sine wave acceleration IEC 60068-2-27 50 gn 11 ms) half sine wave acceleration IEC 60068-2-27
IP Degree of Protection	IP66/IP67/IP69/IP69K
NEMA Degree of Protection	NEMA 4X/13

Ordering and shipping details

Category	US10CS222475
Discount Schedule	0CS2
GTIN	3606480502736
Returnability	Yes
Country of origin	CZ

Packing Units

Unit Type of Package 1	PCE
Nbr. of units in pkg.	1
Package 1 Height	3.900 in (9.906 cm)
Package 1 Width	2.800 in (7.112 cm)
Package 1 Length	2.800 in (7.112 cm)
Package weight(Lbs)	6.560 oz (185.973 g)

Contractual warranty

Warranty (in months)	18

Environmental Data

Schneider Electric aims to achieve Net Zero status by 2050 through supply chain partnerships, lower impact materials, and circularity via our ongoing “Use Better, Use Longer, Use Again” campaign to extend product lifetimes and recyclability.

Environmental Data explained >

How we assess product sustainability >

Environmental footprint

Total lifecycle Carbon footprint	**1 kg CO2 eq.**
Carbon footprint of the manufacturing phase [A1 to A3]	**1 kg CO2 eq.**
Carbon footprint of the distribution phase [A4]	**0 kg CO2 eq.**
Carbon footprint of the installation phase [A5]	**0 kg CO2 eq.**
Carbon footprint of the use phase [B2, B3, B4, B6]	**0.1 kg CO2 eq.**
Carbon footprint of the end-of-life phase [C1 to C4]	**0 kg CO2 eq.**
Environmental Disclosure	**Product Environmental Profile**

Use Better

Materials and Substances

Packaging made with recycled cardboard	**Yes**
Packaging without single use plastic	**Yes**
SCIP Number	**2f798476-9490-459d-81bd-f7dac4bf68c8**
EU RoHS Directive	**Compliant By Exemption**
REACh Regulation	**Free of Substances of Very High Concern above the threshold**
California proposition 65	**WARNING: This product can expose you to chemicals including: Lead and lead compounds, which is known to the State of California to cause cancer and birth defects or other reproductive harm. For more information go to www.P65Warnings.ca.gov**

Use Longer

Lifetime extension

Repair	**No**

Use Again

Repack and remanufacture

Circularity Profile	**End of Life Information**
Take-back	**No**
WEEE Label	**The product must be disposed on European Union markets following specific waste collection and never end up in rubbish bins.**

Dimensions Drawings

Dimensions

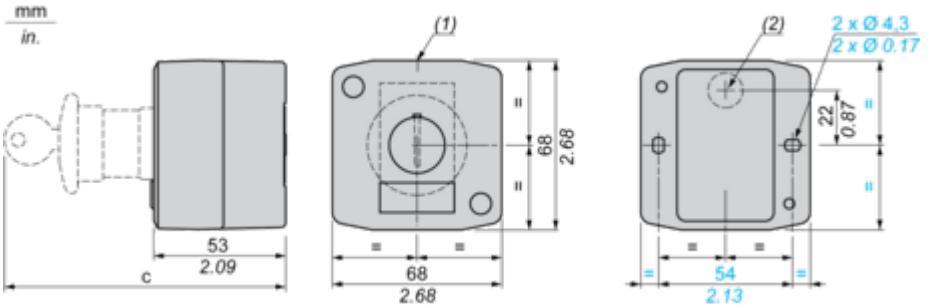

(1) 2 knock-outs for Pg 13.5 cable gland, maximum capacity 12 mm/0.47 in.
(2) Knock-out for cable entry, maximum capacity 14 mm/0.55 in.

Control station fitted with:	c in mm	c in in.
Flush pushbutton	62	2.44
Pilot light	64	2.52
Illuminated pushbutton	65.5	2.58
Projecting pushbutton	66	2.60
Selector switch	80	3.15
Mushroom head pushbutton	91.5	3.58
Latching mushroom head Emergency stop pushbutton with key	115	4.53
Key switch	105.5	4.15

Technical Illustration

Dimensions

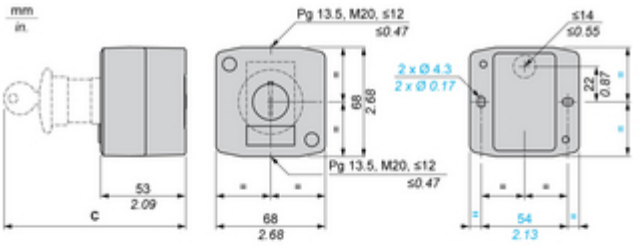

C	mm	in.
ZB5AA●, ZB5AH0●	62	2.44
ZB5AV●	64	2.52
ZB5AW3●	65.5	2.58
ZB5AL●, ZB5AW1●, ZB5AH●, ZB5AH●3	66	2.6
ZB5AD●, ZB5AK●	80	3.15
ZB5AS8●, ZB5AT●, ZB5AC●, ZB5AR●, ZB5AW4●, ZB5AW6●, ZB5AS4●, ZB5AS5●, ZB5AS6●	91.5	3.58
ZB5AS9●, ZB5AS1●, ZB5AS7●	115	4.53
ZB5AG●	105.5	4.15