Product data sheet

Specifications



Analog isolated high level output module, Modicon X80, 2 outputs, 0 to 20mA / 4 to 20mA, 10V positive or negative, for severe environments

BMXAMO0210H

Product availability: Stock - Normally stocked in distribution facility

Main

Range of Product	Modicon X80
Product or Component Type	Analog output module
Product Specific Application	For severe environments
Electrical connection	20 ways 1 connector
Isolation between channels	Isolated

Complementary

Measurement error	0.1 % of full scale 25 °C <= 0.45 % of full scale - 25...70 °C
Temperature drift	30 ppm/°C
Recalibration	Factory calibrated
Minimum crosstalk attenuation	90 dB
Common mode rejection	100 dB
Isolation voltage	1400 V DC between channels and ground 1400 V DC between channels and bus 750 V DC between channels
Detection type	Open circuit 0...20 mA Open circuit 4...20 mA Short circuit +/- 10 V
Load impedance ohmic	<= 600 Ohm 0...20 mA <= 600 Ohm 4...20 mA >= 1000 Ohm +/- 10 V
Output level	High level
Analogue output number	2
Analogue output type	Current 0...20 mA Current 4...20 mA Voltage +/- 10 V
Analogue output resolution	15 bits + sign
Supply	Internal power supply via rack
Conversion time	<= 1 ms
Maximum conversion value	+/- 11.25 V +/- 10 V 0...24 mA 0...20 mA 0...24 mA 4...20 mA
Fallback mode	Configurable Predefined
MTBF reliability	1300000 H

Price is “List Price” and may be subject to a trade discount – check with your local distributor or retailer for actual price.

Disclaimer: This documentation is not intended as a substitute for and is not to be used for determining suitability or reliability of these products for specific user applications

Operating altitude	0...6561.68 ft (0...2000 m) 2000...5000 m with derating factor
Status LED	1 LED (Green) RUN 1 LED per channel (Green) channel diagnostic 1 LED (Red) ERR 1 LED (Red) I/O
Product Weight	0.317 lb(US) (0.144 kg)
Power consumption in W	2.1 W 24 V DC typical 2.8 W 24 V DC maximum 0.35 W 3.3 V DC typical 0.48 W 3.3 V DC maximum
Current consumption	150 mA 3.3 V DC 110 mA 24 V DC

Environment

Vibration resistance	3 gn
Shock resistance	30 gn
Ambient Air Temperature for Storage	-40…185 °F (-40…85 °C)
Ambient Air Temperature for Operation	-13…158 °F (-25…70 °C)
Relative humidity	5…95 % 131 °F (55 °C) without condensation
IP Degree of Protection	IP20
Directives	2014/35/EU - low voltage directive 2014/30/EU - electromagnetic compatibility
Product Certifications	CE RCM CSA EAC Merchant Navy UL ATEX IEC-Ex
Standards	IEC 61010-2-201 IEC 61131-2 UL 61010-2-201 CSA C22.2 No 61010-2-201
Environmental characteristic	Gas resistant class Gx Gas resistant class 3C4 Dust resistant class 3S4 Sand resistant class 3S4 Salt resistant level 2 Mold growth resistant class 3B2 Fungal spore resistant class 3B2 Hazardous location
Protective treatment	Conformal coating

Ordering and shipping details

Category	US1PC3418160
Discount Schedule	PC34
GTIN	3595864025322
Returnability	Yes
Country of origin	US

Packing Units

Unit Type of Package 1	PCE

Nbr. of units in pkg.	1
Package 1 Height	2.165 in (5.500 cm)
Package 1 Width	4.331 in (11.000 cm)
Package 1 Length	4.724 in (12.000 cm)
Package weight(Lbs)	6.455 oz (183.000 g)
Unit Type of Package 2	S02
Number of Units in Package 2	15
Package 2 Height	5.906 in (15.000 cm)
Package 2 Width	11.811 in (30.000 cm)
Package 2 Length	15.748 in (40.000 cm)
Package 2 Weight	6.753 lb(US) (3.063 kg)

Contractual warranty

Warranty (in months)	18

Environmental Data

Schneider Electric aims to achieve Net Zero status by 2050 through supply chain partnerships, lower impact materials, and circularity via our ongoing “Use Better, Use Longer, Use Again” campaign to extend product lifetimes and recyclability.

Environmental Data explained >

How we assess product sustainability >

Environmental footprint

Total lifecycle Carbon footprint	**150 kg CO2 eq.**
Carbon footprint of the manufacturing phase [A1 to A3]	**23 kg CO2 eq.**
Carbon footprint of the distribution phase [A4]	**0 kg CO2 eq.**
Carbon footprint of the installation phase [A5]	**0 kg CO2 eq.**
Carbon footprint of the use phase [B2, B3, B4, B6]	**126 kg CO2 eq.**
Carbon footprint of the end-of-life phase [C1 to C4]	**0.3 kg CO2 eq.**
Environmental Disclosure	Product Environmental Profile

Use Better

Materials and Substances

Packaging made with recycled cardboard	**Yes**
Packaging without single use plastic	**Yes**
EU RoHS Directive	Compliant By Exemption
REACh Regulation	Reference contains Substances of Very High Concern above the threshold
California proposition 65	**WARNING: This product can expose you to chemicals including: Lead and lead compounds, which is known to the State of California to cause cancer and birth defects or other reproductive harm. For more information go to www.P65Warnings.ca.gov**

Use Longer

Lifetime extension

Repair	**No**

Use Again

Repack and remanufacture

Recyclability potential, in %	**3**
Circularity Profile	End of Life Information
Take-back	**No**

Dimensions Drawings

Modules Mounted on Racks

Dimensions

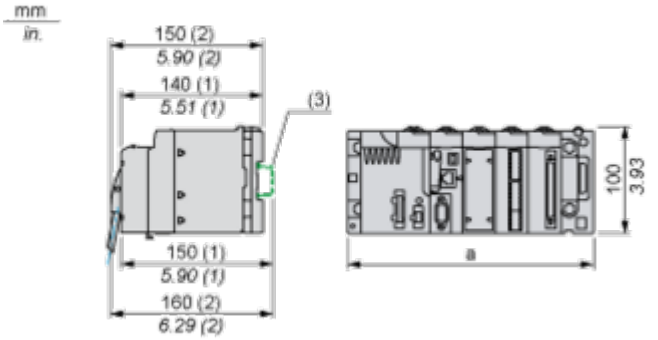

(1) With removable terminal block (cage, screw or spring).
(2) With FCN connector.
(3) On AM1 ED rail: 35 mm wide, 15 mm deep. Only possible with BMXXBP0400/0400H/0600/0600H/0800/0800H rack.

Rack references	a in mm	a in in.
BMXXBP0400 and BMXXBP0400H	242.4	09.54
BMXXBP0600 and BMXXBP0600H	307.6	12.11
BMXXBP0800 and BMXXBP0800H	372.8	14.68
BMXXBP1200 and BMXXBP1200H	503.2	19.81

Connections and Schema

Wiring Diagram

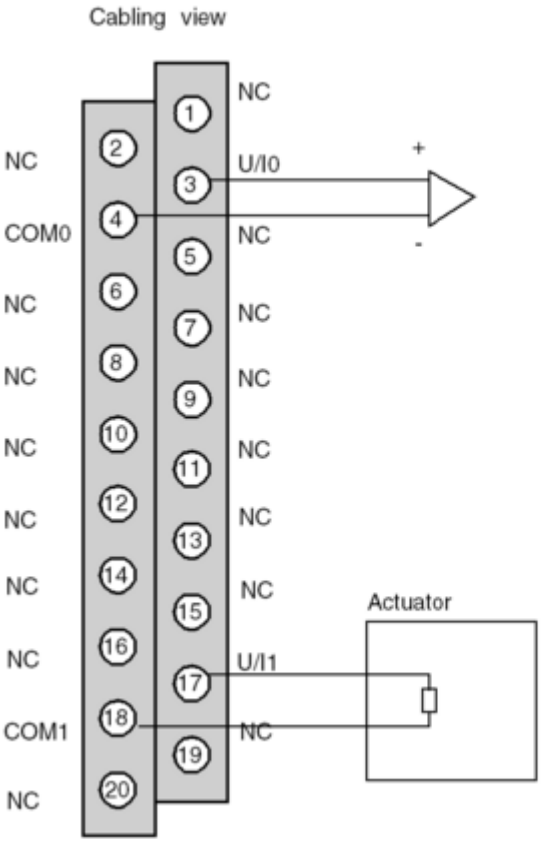

U/Ix + pole input for channel x
COMx - pole input for channel x
Channel 0 Voltage actuator
Channel 1 Current actuator
The current loop is self-powered by the output and does not request any external supply.

Image of product / Alternate images

Alternative



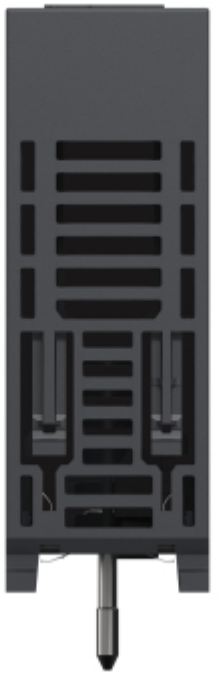





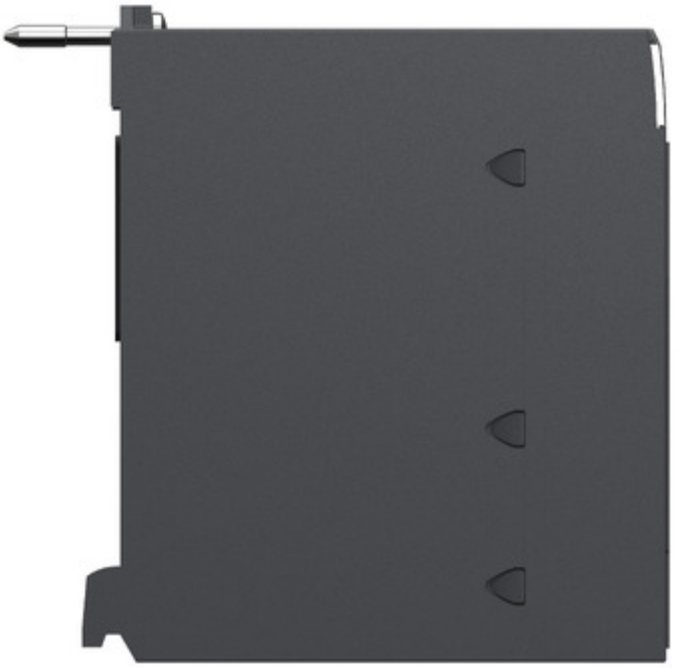


Schneider
Electric
Modicon
BMXAMO0210H
ANA 2 U/I OUT ISOLATED
DOM : XXXX