Product data sheet
Characteristics

ABL1REM24100
regulated SMPS - single phase - 100..240 V input - 24 V output - 240 W



Main

Range of product	Phaseo Dedicated
Product or component type	Power supply
Power supply type	Regulated switch mode
Kw Rating	240 W
Nominal Input Voltage	AC single phase AC single phase DC
Output voltage	24 V DC
Power supply output current	10 A
Operating position	Any position
Vibration resistance	2 gn 9…150 Hz)EN/IEC 61131-2 3.5 mm 5…9 Hz)EN/IEC 61131-2
Name of test	Conducted interference EN 61000-4-8 level 4 Electrostatic discharges EN/IEC 61000-4-2 level 3 Induced electromagnetic field EN/IEC 61000-4-6 level 3 Radiated electromagnetic field EN/IEC 61000-4-3 level 3 Rapid transient IEC 61000-4-4 level 3 Conducted/Radiated emissions EN 55022 Class B Conducted/Radiated emissions EN/IEC 55011 Emission EN/IEC 61000-6-3 Primary outage IEC 61000-4-11 Surge EN/IEC 61000-4-5

Complementary

Input voltage limits	170...264 V 85...132 V
Network frequency	47...63 Hz
Inrush current	50 A 115 V AC 100 A 230 V AC
Cos phi	0.65
Efficiency	80 %
Power dissipation in W	60 W
Current consumption	3 A 240 V 6 A 100 V
Input protection type	Integrated fuse (not interchangeable)
Output voltage limits	21.6...26.4 V
Line and load regulation	+/- 3 %
Holding time	>= 10 ms 100 V >= 40 ms 240 V
Output protection type	Against overload 1.1...1.5 x In Against overvoltage tripping if U > 1.25 x Un Against short-circuits automatic reset Thermal
Connections - terminals	Ground connection screw type terminals 1 x 4 mm² AWG 12 Input connection screw type terminals 2 x 4 mm² AWG 12 Output connection screw type terminals 4 x 4 mm² AWG 12
Marking	CE
Mounting support	Reversible mounting bracket Panel
Operating altitude	6561.68 ft (2000 m)

The information provided in this documentation contains general descriptions and/or technical characteristics of the performance of the products contained herein.
This documentation is not intended as a substitute for and is not to be used for determining suitability or reliability of these products for specific user applications.
It is the duty of any such user or integrator to perform the appropriate and complete risk analysis, evaluation and testing of the products with respect to the relevant specific application or use thereof.
Neither Schneider Electric Industries SAS nor any of its affiliates or subsidiaries shall be responsible or liable for misuse of the information contained herein.

Output coupling	Series Parallel
Overvoltage category	II
Meantime between failure [MTBF]	100000 h 104 °F (40 °C)
Status LED	Output voltage 1 LED Green)
Net Weight	1.94 lb(US) (0.88 kg)

Environment

Product certifications	CSA 22-2 No 60950-1 UL 508 KC EAC CCSAus RCM TUV 60950-1
Environmental characteristic	EMC EN 50081-1 EMC EN 50082-2 EMC EN 61000-6-3 EMC EN/IEC 61000-6-2 Safety EN/IEC 60950-1 Safety SELV
IP degree of protection	IP20 EN/IEC 60950
Ambient air temperature for operation	32…113 °F (0…45 °C) without derating) 113…140 °F (45…60 °C) with derating factor)
Ambient air temperature for storage	-13…185 °F (-25…85 °C)
Relative humidity	20…90 %
Overvoltage category	Class I VDE 0106-1
Pollution degree	2
Dielectric strength	1500 V between input and ground 3000 V between input and output 500 V between output and ground

Ordering and shipping details

Category	22524 - ABL1 DEDICATED POWER SUPPLIES
Discount Schedule	CP12
GTIN	00785901525561
Nbr. of units in pkg.	1
Package weight(Lbs)	2.34 lb(US) (1.06 kg)
Returnability	Yes
Country of origin	CN

Packing Units

Unit Type of Package 1	PCE
Package 1 Height	3.35 in (8.5 cm)
Package 1 width	4.72 in (12 cm)
Package 1 Length	9.25 in (23.5 cm)
Unit Type of Package 2	P06
Number of Units in Package 2	84
Package 2 Weight	224.40 lb(US) (101.788 kg)
Package 2 Height	28.94 in (73.5 cm)
Package 2 width	31.50 in (80 cm)
Package 2 Length	23.62 in (60 cm)

Offer Sustainability

Sustainable offer status	Green Premium product
REACh Regulation	REACh Declaration
EU RoHS Directive	Pro-active compliance (Product out of EU RoHS legal scope) EU RoHS Declaration
Mercury free	Yes
RoHS exemption information	Yes
China RoHS Regulation	China RoHS Declaration
Environmental Disclosure	Product Environmental Profile
Circularity Profile	End Of Life Information
PVC free	Yes

Contractual warranty

Warranty	18 months

ABL1REM24100

Dimensions

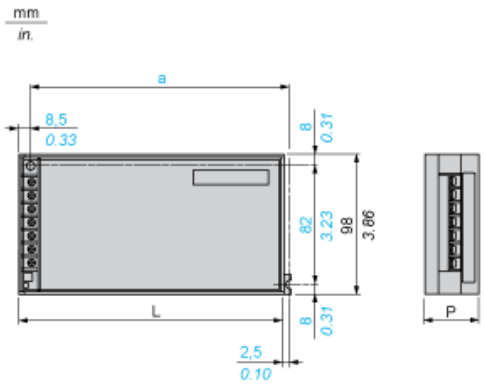

Dimensions in mm

a	L	P
194	200	65

Dimensions in in.

a	L	P
7.64	7.87	2.56

Life Is On Schneider Electric

Clearance

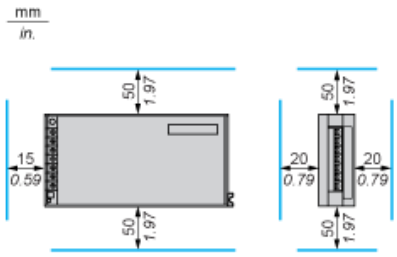

Mounting Way

Mounting on Vertical Plane

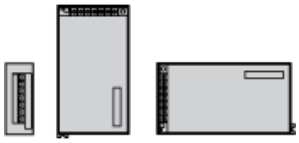

Mounting on Horizontal Plane



Direct Mounting by 2 M4 x 20 Screws

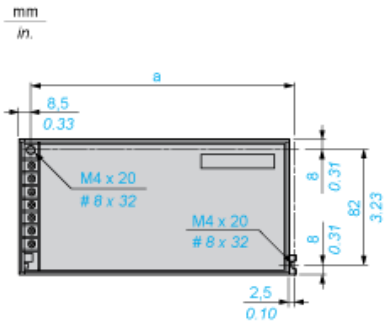

Dimensions in mm

a
194

Dimensions in in

a
7.64

Mounting on the Back on ABL 1A01 Reversible Bracket by Three 4 mm Diameter Screws

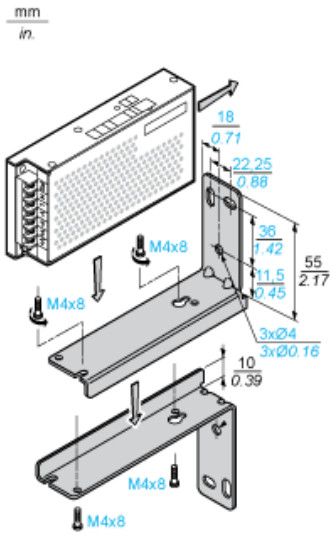

Mounting on ABL 1A02 Clip-on Mounting on 35 mm Rail

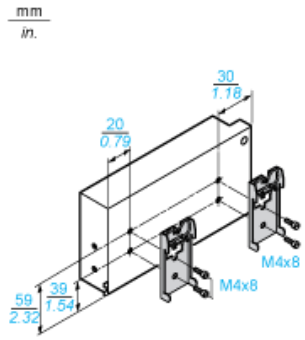

Mounting by the Back

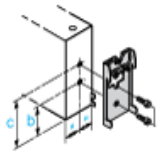

Dimensions in mm

b	c
28	48

Dimensions in in.

b	c
1.10	1.89

Internal Wiring Diagram

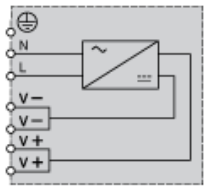

Series or Parallel Connection

Series Connection

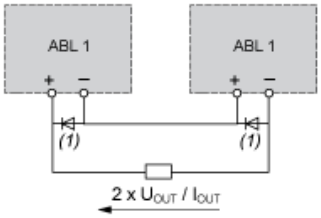

Parallel Connection

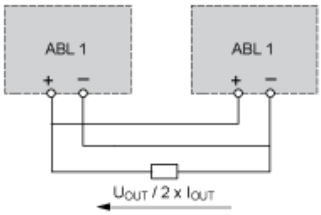

(1) 15 A/100 V Shottky diode

Derating Curves

Mounting on Vertical Plane

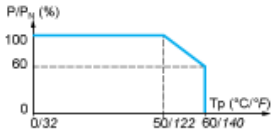

Mounting on Horizontal Plane

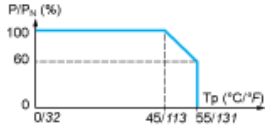

Load Limits Curve

