Product data sheet

Specifications



servo motor BMI 3-phase - untapped IP54 single turn - 32768 p/ t

BMI0702P06A

Product availability: Non-Stock - Not normally stocked in distribution facility

Main

Range Compatibility	Lexium 32i
Device short name	BMI
Product or Component Type	Servo motor with power stage

Complementary

Maximum mechanical speed	8000 rpm
[Us] rated supply voltage	208...480 V - 15...10 %
Supply voltage limits	208…480 V
Phase	Three phase
Supply frequency	50/60 Hz - 5...5 %
Network frequency limits	47.5…63 Hz
EMC filter	Integrated
Continuous output current	2 A 8 kHz
Output current 3s peak	6 A 400 V 3 s
Continuous stall current	2 A
Continuous stall torque	21.95 lbf.in (2.48 N.m) 208...480 V three phase
Peak stall torque	60.2 lbf.in (6.8 N.m) 208 V three phase 60.2 lbf.in (6.8 N.m) 400 V three phase 60.2 lbf.in (6.8 N.m) 480 V three phase
Nominal output power	400 W 208 V three phase 800 W 400 V three phase 900 W 480 V three phase
Nominal torque	21.2 lbf.in (2.4 N.m) 208 V three phase 19.5 lbf.in (2.2 N.m) 400 V three phase 17.7 lbf.in (2 N.m) 480 V three phase
Nominal speed	1800 rpm 208 V three phase 3600 rpm 400 V three phase 4400 rpm 480 V three phase
Maximum current Irms	9.6 A 208 V, three phase 9.6 A 400 V, three phase 9.6 A 480 V, three phase
Product compatibility	Drive control unit LXM32i CANopen Drive control unit LXM32i EtherCAT
Shaft end	Untapped
Second shaft	Without second shaft end
Shaft diameter	0.4 in (11 mm)
Shaft length	0.9 in (23 mm)

Price is “List Price” and may be subject to a trade discount – check with your local distributor or retailer for actual price.

Disclaimer: This documentation is not intended as a substitute for and is not to be used for determining suitability or reliability of these products for specific user applications

Feedback type	Absolute single turn SinCos Hiperface
Speed feedback resolution	32768 points/turn
Holding brake	Without
Mounting Support	International standard flange
Motor flange size	2.8 in (70 mm)
Electrical Connection	Printed circuit board connector
Torque constant	1.15 N.m/A 68 °F (20 °C)
Back emf constant	77.18 V/krpm 68 °F (20 °C)
Number of motor poles	10
Rotor inertia	1.13 kg.cm²
Stator resistance	8.89 Ohm 68 °F (20 °C)
Stator inductance	25.75 mH 68 °F (20 °C)
Stator electrical time constant	2.9 ms 68 °F (20 °C)
Maximum radial force Fr	710 N 1000 rpm 560 N 2000 rpm 490 N 3000 rpm 450 N 4000 rpm 410 N 5000 rpm 390 N 6000 rpm
Maximum axial force Fa	0.2 x Fr
Type of cooling	Natural convection
Length	10.6 in (268 mm)
Number of motor stacks	2
Centring collar diameter	2.4 in (60 mm)
Centring collar depth	0.10 in (2.5 mm)
Number of mounting holes	4
Mounting holes diameter	0.2 in (5.5 mm)
Circle diameter of the mounting holes	3.0…3.2 in (75…82 mm)
Distance shaft shoulder-flange	0.10 in (2.5 mm)

Environment

IP Degree of Protection	Shaft IP54 Housing IP65

Ordering and shipping details

Category	US1PC5618287
Discount Schedule	PC56
GTIN	3606485375687
Returnability	No
Country of origin	DE

Packing Units

Unit Type of Package 1	PCE
Nbr. of units in pkg.	1

Package 1 Height	8.110 in (20.600 cm)
Package 1 Width	10.591 in (26.900 cm)
Package 1 Length	23.661 in (60.100 cm)
Package weight(Lbs)	11.931 lb(US) (5.412 kg)
Unit Type of Package 2	P06
Number of Units in Package 2	8
Package 2 Height	30.315 in (77.000 cm)
Package 2 Width	23.622 in (60.000 cm)
Package 2 Length	31.496 in (80.000 cm)
Package 2 Weight	117.401 lb(US) (53.252 kg)

Contractual warranty

Warranty (in months)	18

Environmental Data

Schneider Electric aims to achieve Net Zero status by 2050 through supply chain partnerships, lower impact materials, and circularity via our ongoing “Use Better, Use Longer, Use Again” campaign to extend product lifetimes and recyclability.

Environmental Data explained >

How we assess product sustainability >

Environmental footprint

Total lifecycle Carbon footprint	**3 kg CO2 eq.**
Carbon footprint of the manufacturing phase [A1 to A3]	**2 kg CO2 eq.**
Carbon footprint of the distribution phase [A4]	**0 kg CO2 eq.**
Carbon footprint of the installation phase [A5]	**0 kg CO2 eq.**
Carbon footprint of the use phase [B2, B3, B4, B6]	**0 kg CO2 eq.**
Carbon footprint of the end-of-life phase [C1 to C4]	**0.9 kg CO2 eq.**
Environmental Disclosure	Product Environmental Profile

Use Better

Materials and Substances

Packaging made with recycled cardboard	**Yes**
Packaging without single use plastic	**No**
EU RoHS Directive	Compliant By Exemption
REACh Regulation	Reference contains Substances of Very High Concern above the threshold
California proposition 65	**WARNING: This product can expose you to chemicals including: Lead and lead compounds, which is known to the State of California to cause cancer and birth defects or other reproductive harm. For more information go to www.P65Warnings.ca.gov**
PVC free	**Yes**

Use Longer

Lifetime extension

Repair	**No**

Use Again

Repack and remanufacture

Recyclability potential, in %	**93**
Circularity Profile	End of Life Information
Take-back	**No**
WEEE Label	**The product must be disposed on European Union markets following specific waste collection and never end up in rubbish bins.**

Dimensions Drawings

External Dimensions

With Standard Braking Resistor

Mounting type A

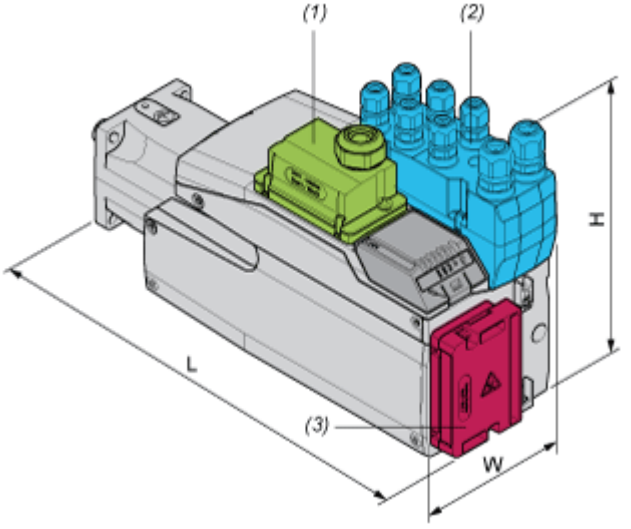

(1) Module for supply voltage

(2) I/O module

(3) Standard braking resistor

Dimensions in mm

W	H	L
99	187	289

Dimensions in in.

W	H	L
3,9	7,36	11,38

Mounting type B

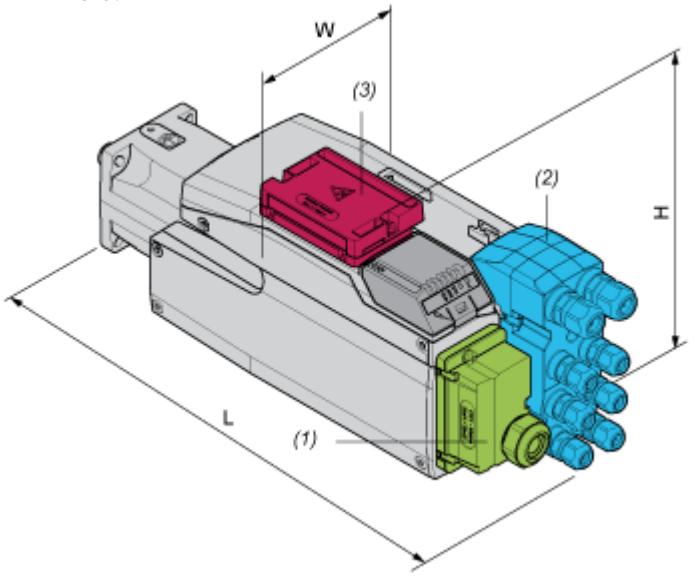

(1) Module for supply voltage

(2) I/O module

(3) Standard braking resistor

Dimensions in mm

W	H	L
99	138,5	338

Dimensions in in.

W	H	L
3,9	5,45	13,31

With External Braking Resistor

Mounting type C

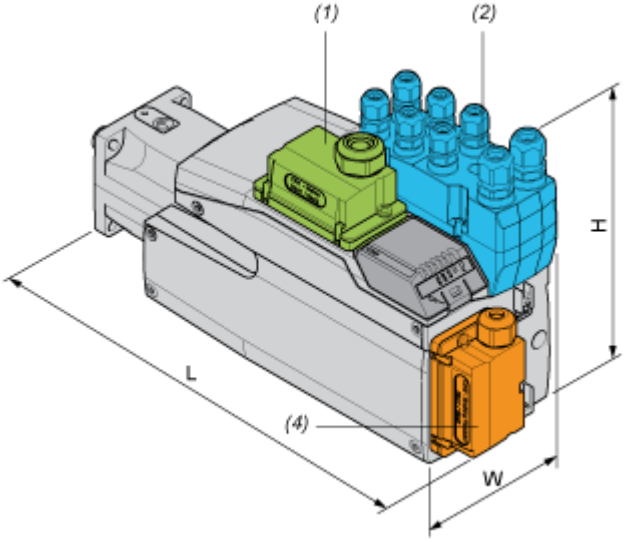

(1) Module for supply voltage

(2) I/O module

(4) External braking resistor

Dimensions in mm

W	H	L
99	187	301

Dimensions in in.

W	H	L
3,9	7,36	11,85

Mounting type D

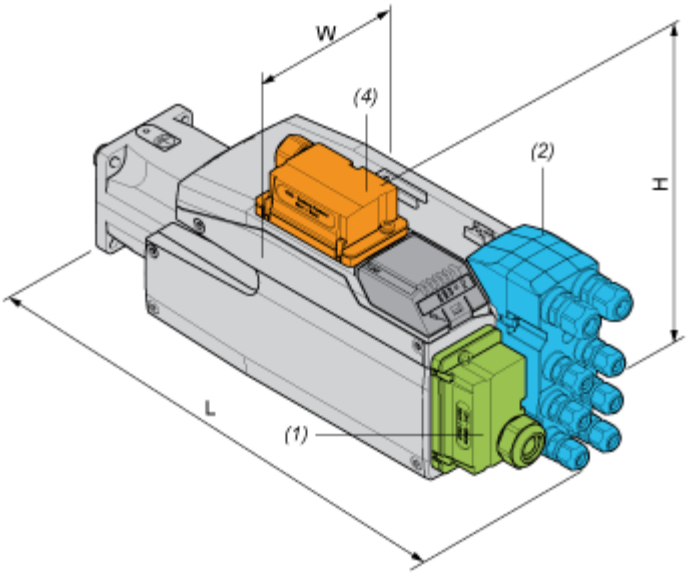

(1) Module for supply voltage

(2) I/O module

(4) External braking resistor

Dimensions in mm

W	H	L
99	160	338

Dimensions in in.

W	H	L
3,9	6,3	13,31

Mounting type E

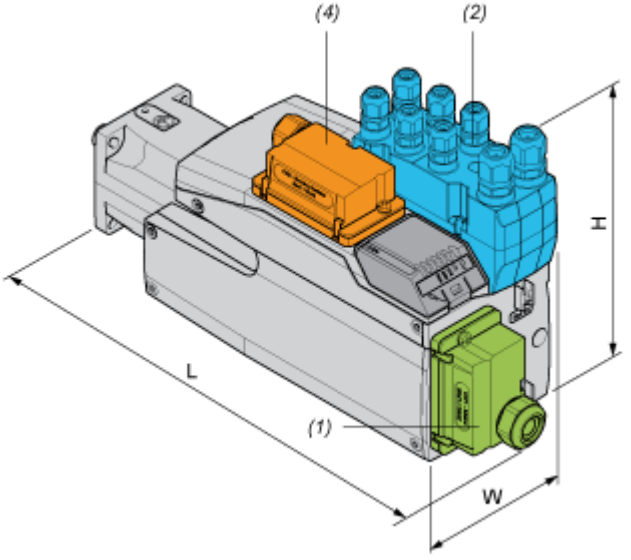

(1) Module for supply voltage

(2) I/O module

(4) External braking resistor

Dimensions in mm

W	H	L
99	187	328

Dimensions in in.

W	H	L
3,9	7,36	12,91

Mounting type F

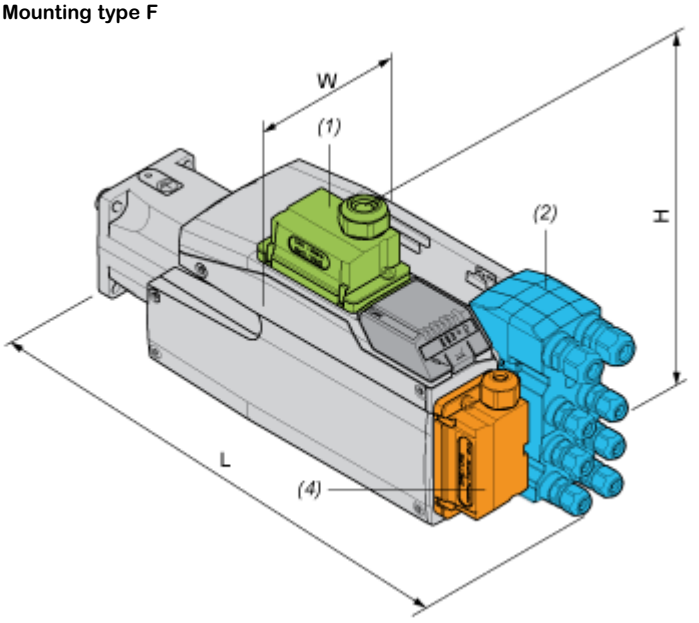

(1) Module for supply voltage

(2) I/O module

(4) External braking resistor

Dimensions in mm

W	H	L
99	180	338

Dimensions in in.

W	H	L
3,9	7,09	13,31

Performance Curves

Performance Curves

Torque/Speed Curves with 208 V Three Phases Supply Voltage

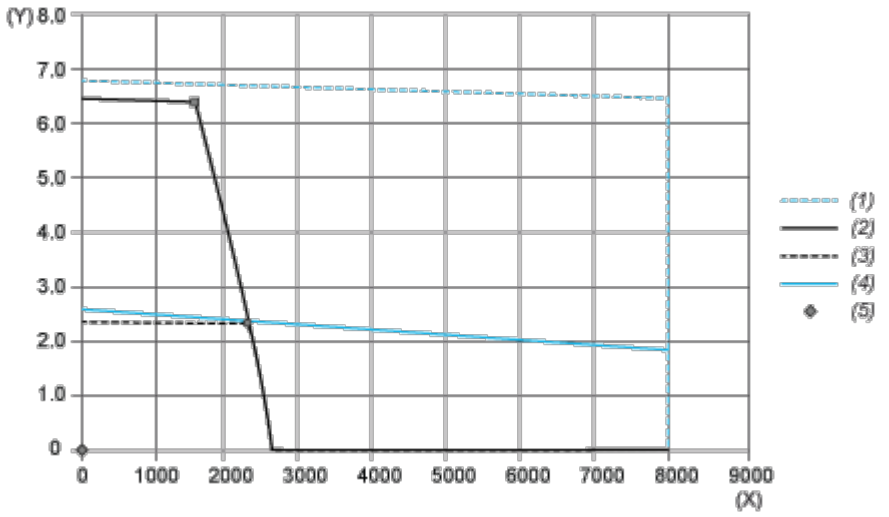

(X) Speed (rpm)

(Y) Torque (N.m)

(1) Motor peak

(2) Drive peak

(3) Drive cont

(4) Motor cont

(5) Operating point

		Power	At Speed	With Torque
max. Peak Power	■	1013 W	1520 rpm	6.36 N.m
max Cont. Power (Drive)	●	519 W	2240 rpm	2.21 N.m

Performance Curves

Torque/Speed Curves with 400 V Three Phases Supply Voltage

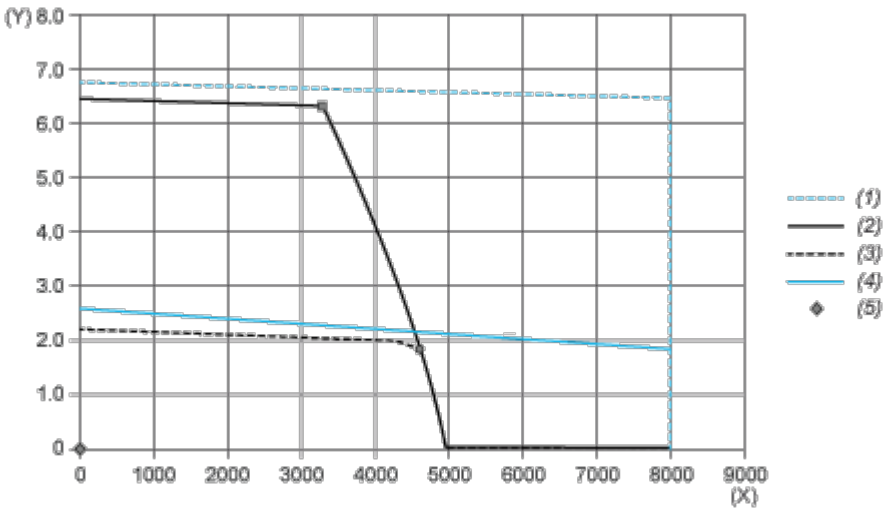

(X) Speed (rpm)

(Y) Torque (N.m)

(1) Motor peak

(2) Drive peak

(3) Drive cont

(4) Motor cont

(5) Operating point

		Power	At Speed	With Torque
max. Peak Power	■	2161 W	3280 rpm	6.29 N.m
max Cont. Power (Drive)	●	892 W	4560 rpm	1.87 N.m

Performance Curves

Torque/Speed Curves with 480 V Three Phases Supply Voltage

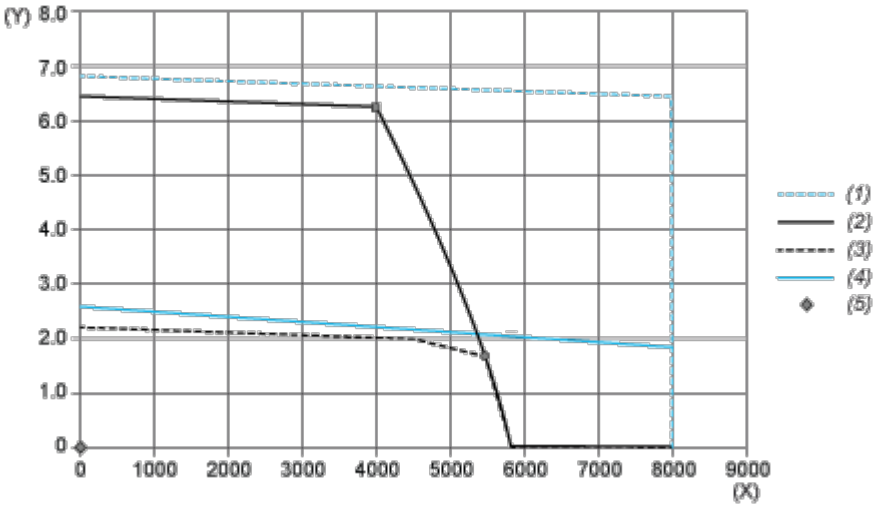

(X) Speed (rpm)

(Y) Torque (N.m)

(1) Motor peak

(2) Drive peak

(3) Drive cont

(4) Motor cont

(5) Operating point

		Power	At Speed	With Torque
max. Peak Power	■	2623 W	4000 rpm	6.26 N.m
max Cont. Power (Drive)	●	943 W	5600 rpm	1.61 N.m