Product data sheet

Specifications



discrete input module, Modicon TM5, 4 DI, 24V DC sink, 3 wires

TM5SDI4D

Product availability: Stock - Normally stocked in distribution facility

Main

Range of Product	Modicon TM5
Product or Component Type	Discrete input module
Product Compatibility	Logic controller Motion controller PacDrive LMC Pro PacDrive LMC Eco PacDrive LMC Pro 2
Range Compatibility	Modicon M258 PacDrive LMC motion controller Modicon LMC058
Discrete input number	4
Discrete input voltage	24 V DC 20.4...28.8 V)
Discrete input logic	Sink

Complementary

Discrete input compatibility	4 at 24 V DC
Discrete input current	3.75 mA at 24 V DC
Voltage state 1 guaranteed	>= 15 V
Voltage state 0 guaranteed	<= 5 V
Input impedance	6.4 kOhm
Input filtering	<= 25 ms configurable by software <= 100 ms hardware
Maximum voltage drop	<2 V at 500 mA sensor supply
Typical current consumption	28 mA 5 V DC 25 mA 24 V DC
Electrical Connection	3 wires
Power dissipation in W	0.73 W
Local signalling	1 LED (green) for power supply 1 LED (red) for power supply 4 LEDs (green) for input status
Height	3.9 in (99 mm)
Width	0.5 in (12.5 mm)
Depth	3.0 in (75 mm)
Product Weight	0.055 lb(US) (0.025 kg)

Price is “List Price” and may be subject to a trade discount – check with your local distributor or retailer for actual price.

Disclaimer: This documentation is not intended as a substitute for and is not to be used for determining suitability or reliability of these products for specific user applications

Electromagnetic compatibility	Electrostatic discharge immunity test, 4 kV on contact IEC 61000-4-2 Electrostatic discharge immunity test, 8 kV in air IEC 61000-4-2 Susceptibility to electromagnetic fields, 1 V/m 2...2.7 GHz IEC 61000-4-3 Susceptibility to electromagnetic fields, 10 V/m 80...2000 MHz IEC 61000-4-3 Electrical fast transient/burst immunity test, 1 kV I/O IEC 61000-4-4 Electrical fast transient/burst immunity test, 1 kV shielded cable IEC 61000-4-4 Electrical fast transient/burst immunity test, 2 kV power lines IEC 61000-4-4 1.2/50 µs shock waves immunity test, 0.5 kV differential mode IEC 61000-4-5 1.2/50 µs shock waves immunity test, 1 kV common mode IEC 61000-4-5 Conducted RF disturbances IEC 61000-4-6 Conducted and radiated emissions CISPR 11

Environment

IP Degree of Protection	IP20
Marking	CE
Product certifications	CSA C-tick CULus GOST-R
Standards	IEC 61131-2 CSA C22.2 No 142 UL 508 CSA C22.2 No 213
Ambient air temperature for operation	14…131 °F (-10…55 °C) without derating horizontal installation) 14…140 °F (-10…60 °C) with derating factor horizontal installation) 14…122 °F (-10…50 °C) vertical installation)
Ambient air temperature for storage	-40…158 °F (-40…70 °C)
Relative humidity	5…95 % without condensation
Operating altitude	0...6561.68 ft (0...2000 m)
Pollution degree	2
Vibration resistance	1 gn 8.4…150 Hz) on DIN rail 3.5 mm 5…8.4 Hz) on DIN rail
Shock resistance	15 gn 11 ms

Ordering and shipping details

Category	US1PC1222532
Discount Schedule	PC12
GTIN	3595864074436
Returnability	Yes
Country of origin	AT

Packing Units

Unit Type of Package 1	PCE
Nbr. of units in pkg.	1
Package 1 Height	0.787 in (2.000 cm)
Package 1 Width	2.362 in (6.000 cm)
Package 1 Length	4.134 in (10.500 cm)
Package weight(Lbs)	1.305 oz (37.000 g)
Unit Type of Package 2	S02
Number of Units in Package 2	97
Package 2 Height	5.906 in (15.000 cm)

Package 2 Width	11.811 in (30.000 cm)
Package 2 Length	15.748 in (40.000 cm)
Package 2 Weight	8.468 lb(US) (3.841 kg)

Contractual warranty

Warranty (in months)	18

Environmental Data

Schneider Electric aims to achieve Net Zero status by 2050 through supply chain partnerships, lower impact materials, and circularity via our ongoing “Use Better, Use Longer, Use Again” campaign to extend product lifetimes and recyclability.

Environmental Data explained >

How we assess product sustainability >

Environmental footprint

Total lifecycle Carbon footprint	**31 kg CO2 eq.**
Carbon footprint of the manufacturing phase [A1 to A3]	**1 kg CO2 eq.**
Carbon footprint of the distribution phase [A4]	**0 kg CO2 eq.**
Carbon footprint of the installation phase [A5]	**0 kg CO2 eq.**
Carbon footprint of the use phase [B2, B3, B4, B6]	**29 kg CO2 eq.**
Carbon footprint of the end-of-life phase [C1 to C4]	**0.1 kg CO2 eq.**
Environmental Disclosure	Product Environmental Profile

Use Better

Materials and Substances

Packaging made with recycled cardboard	**No**
Packaging without single use plastic	**Yes**
EU RoHS Directive	Compliant By Exemption
REACh Regulation	Free of Substances of Very High Concern above the threshold
California proposition 65	**WARNING: This product can expose you to chemicals including: Lead and lead compounds, which is known to the State of California to cause cancer and birth defects or other reproductive harm. For more information go to www.P65Warnings.ca.gov**
PVC free	**Yes**

Use Longer

Lifetime extension

Repair	**No**

Use Again

Repack and remanufacture

Recyclability potential, in %	**0**
Circularity Profile	End of Life Information
Take-back	**No**
WEEE Label	**The product must be disposed on European Union markets following specific waste collection and never end up in rubbish bins.**

Dimensions Drawings

TM5 Slice

Dimensions

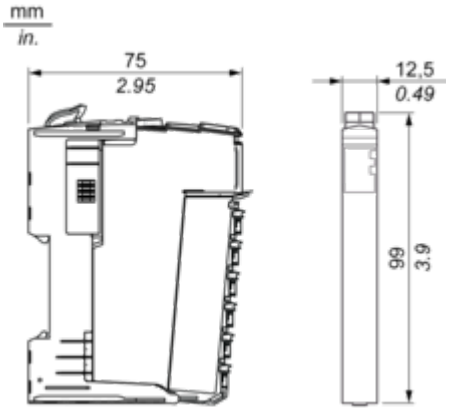

Mounting and Clearance

TM5 System

Spacing Requirements

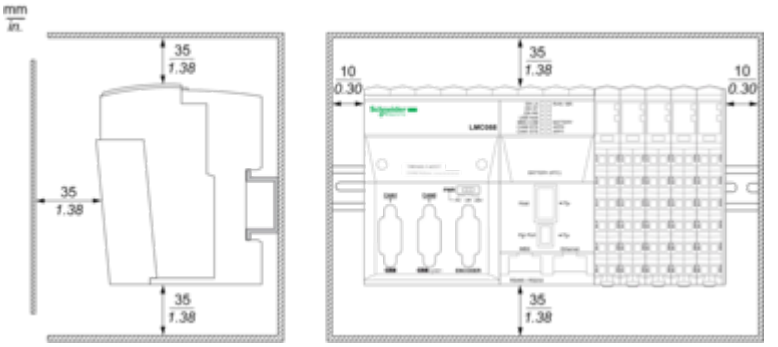

Mounting on a DIN Rail

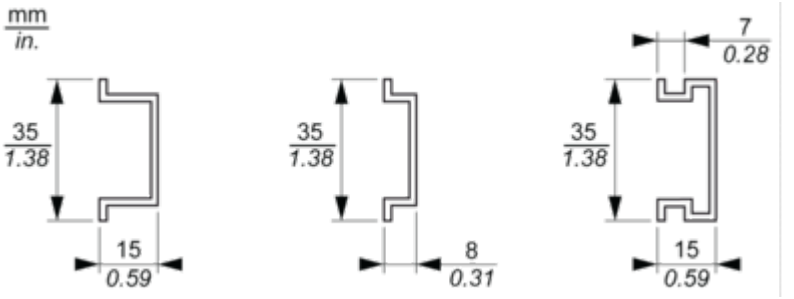

Connections and Schema

TM5 System Wiring Recommendations

Wire Sizes to Use with the Removable Spring Terminal Blocks

mm / in. 				
mm^2	0,08...2,5	0,25...2,5	0,25...1,5	2 x 0,25...2 x 0,75
AWG	28...14	24...14	24...16	2 x 24...2 x 18

Electronic Module 4DI 24 Vdc Sink 3 Wires

Wiring Diagram

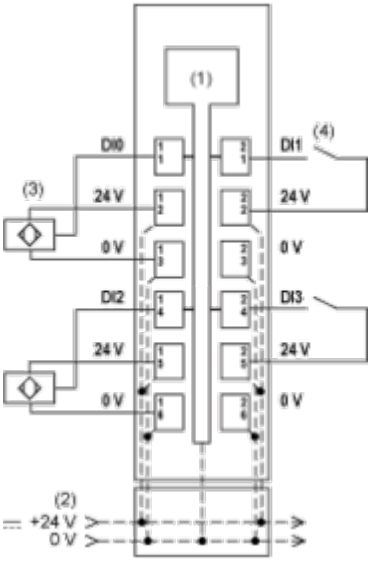

(1) Internal electronics
(2) 24 Vdc I/O power segment integrated into the bus bases
(3) 3-wire sensor
(4) 2-wire sensor