Product data sheet

Specifications



power supply module, Modicon X80, 100 to 240V AC, 36W

BMXCPS3500

Product availability: Stock - Normally stocked in distribution facility

Main

Range of Product	Modicon X80
Product or Component Type	Power supply module
backplane compatibility	Not compatible with BMEXBP..02
Primary Voltage	100...240 V
Supply circuit type	AC
Secondary power	15 W 3.3 V DC I/O module logic power supply 31.2 W 24 V DC I/O module power supply and processor 21.6 W 24 V DC sensor power supply

Complementary

Primary voltage limit	85...264 V
Network Frequency	50/60 Hz
Network frequency limits	47…63 Hz
Apparent power	0.12 kVA
Input current	0.52 A 240 V 1.04 A 115 V
Inrush current	30 A 120 V 60 A 240 V
I²t on activation	1 A².s 120 V 3 A².s 240 V
It on activation	0.05 A.s 120 V 0.07 A.s 240 V
MTBF reliability	4300000 H
Protection type	Internal fuse not accessible primary circuit Overload protection secondary circuit Overvoltage protection secondary circuit Short-circuit protection secondary circuit
Current at secondary voltage	0.9 A 24 V DC sensor power supply 1.3 A 24 V DC I/O module power supply and processor 4.5 A 3.3 V DC I/O module logic power supply
Maximum power dissipation in W	8.5 W
Status LED	1 LED (Green) rack voltage OK 1 LED (Green) sensor voltage
Control Type	RESET push-button cold restart
Electrical connection	1 connector 2 alarm relay 1 connector 5 line supply, protective earth, 24 V DC input sensor
Insulation resistance	>= 100 MOhm primary/ground >= 100 MOhm primary/secondary

Price is “List Price” and may be subject to a trade discount – check with your local distributor or retailer for actual price.

Disclaimer: This documentation is not intended as a substitute for and is not to be used for determining suitability or reliability of these products for specific user applications

Product Weight	0.79 lb(US) (0.36 kg)

Environment

Immunity to microbreaks	1 ms
Dielectric strength	1500 V primary/secondary I/O module logic power supply 1500 V primary/secondary I/O module power supply and processor 2300 V primary/secondary sensor power supply 1500 V primary/ground 500 V 24 V sensor output/ground
Vibration resistance	3 gn
Shock resistance	30 gn
IP Degree of Protection	IP20
Directives	2014/35/EU - low voltage directive 2014/30/EU - electromagnetic compatibility
Ambient Air Temperature for Storage	-40…185 °F (-40…85 °C)
Ambient Air Temperature for Operation	32…140 °F (0…60 °C)
Relative humidity	5…95 % 131 °F (55 °C) without condensation
Protective treatment	TC
Operating altitude	0...6561.68 ft (0...2000 m) 2000...5000 m with derating factor

Ordering and shipping details

Category	US1PC3418160
Discount Schedule	PC34
GTIN	3595863908978
Returnability	Yes
Country of origin	US

Packing Units

Unit Type of Package 1	PCE
Nbr. of units in pkg.	1
Package 1 Height	5.118 in (13.000 cm)
Package 1 Width	6.102 in (15.500 cm)
Package 1 Length	6.102 in (15.500 cm)
Package weight(Lbs)	18.695 oz (530.000 g)
Unit Type of Package 2	S04
Number of Units in Package 2	12
Package 2 Height	11.811 in (30.000 cm)
Package 2 Width	15.748 in (40.000 cm)
Package 2 Length	23.622 in (60.000 cm)
Package 2 Weight	16.579 lb(US) (7.520 kg)
Unit Type of Package 3	P06
Number of Units in Package 3	48
Package 3 Height	29.528 in (75.000 cm)

Package 3 Width	23.622 in (60.000 cm)
Package 3 Length	31.496 in (80.000 cm)
Package 3 Weight	90.390 lb(US) (41.000 kg)

Contractual warranty

Warranty (in months)	18

Environmental Data

Schneider Electric aims to achieve Net Zero status by 2050 through supply chain partnerships, lower impact materials, and circularity via our ongoing “Use Better, Use Longer, Use Again” campaign to extend product lifetimes and recyclability.

Environmental Data explained >

How we assess product sustainability >

Environmental footprint

Total lifecycle Carbon footprint	**457 kg CO2 eq.**
Carbon footprint of the manufacturing phase [A1 to A3]	**6 kg CO2 eq.**
Carbon footprint of the distribution phase [A4]	**0.1 kg CO2 eq.**
Carbon footprint of the installation phase [A5]	**0.2 kg CO2 eq.**
Carbon footprint of the use phase [B2, B3, B4, B6]	**451 kg CO2 eq.**
Carbon footprint of the end-of-life phase [C1 to C4]	**0.7 kg CO2 eq.**
Environmental Disclosure	**Product Environmental Profile**

Use Better

Materials and Substances

Packaging made with recycled cardboard	**Yes**
Packaging without single use plastic	**Yes**
SCIP Number	**41745a42-b2d7-4938-80f8-0738cea8ed1d**
EU RoHS Directive	**Compliant By Exemption**
REACh Regulation	**Reference contains Substances of Very High Concern above the threshold**
California proposition 65	**WARNING: This product can expose you to chemicals including: Lead and lead compounds, which is known to the State of California to cause cancer and birth defects or other reproductive harm. For more information go to www.P65Warnings.ca.gov**

Use Longer

Lifetime extension

Repair	**No**

Use Again

Repack and remanufacture

Recyclability potential, in %	**1**
Circularity Profile	**End of Life Information**
Take-back	**No**

Dimensions Drawings

Modules Mounted on Racks

Dimensions

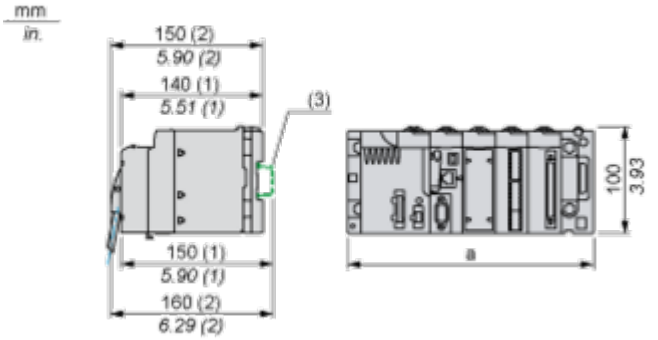

(1) With removable terminal block (cage, screw or spring).
(2) With FCN connector.
(3) On AM1 ED rail: 35 mm wide, 15 mm deep. Only possible with BMXXBP0400/0400H/0600/0600H/0800/0800H rack.

Rack references	a in mm	a in in.
BMXXBP0400 and BMXXBP0400H	242.4	09.54
BMXXBP0600 and BMXXBP0600H	307.6	12.11
BMXXBP0800 and BMXXBP0800H	372.8	14.68
BMXXBP1200 and BMXXBP1200H	503.2	19.81

Connections and Schema

Connection of Alternating Current Power Supply Modules

Connection of a PLC Station Constituted of a Single Rack

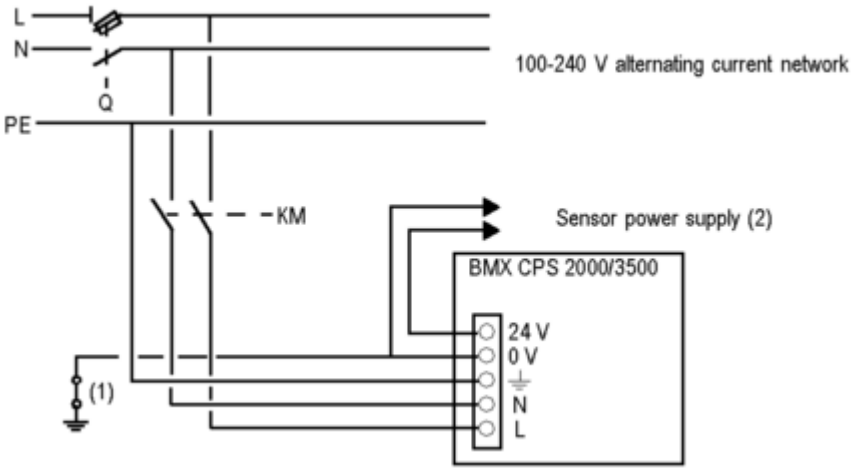

Q General isolator
KM Line contactor or circuit breaker
(1) Insulation connector bar for locating grounding errors
(2) Available current of 0.45 A for the BMXCPS2000 module or 0.9 A for the BMXCPS3500 module

Connection of a PLC Station Constituted of Several Racks

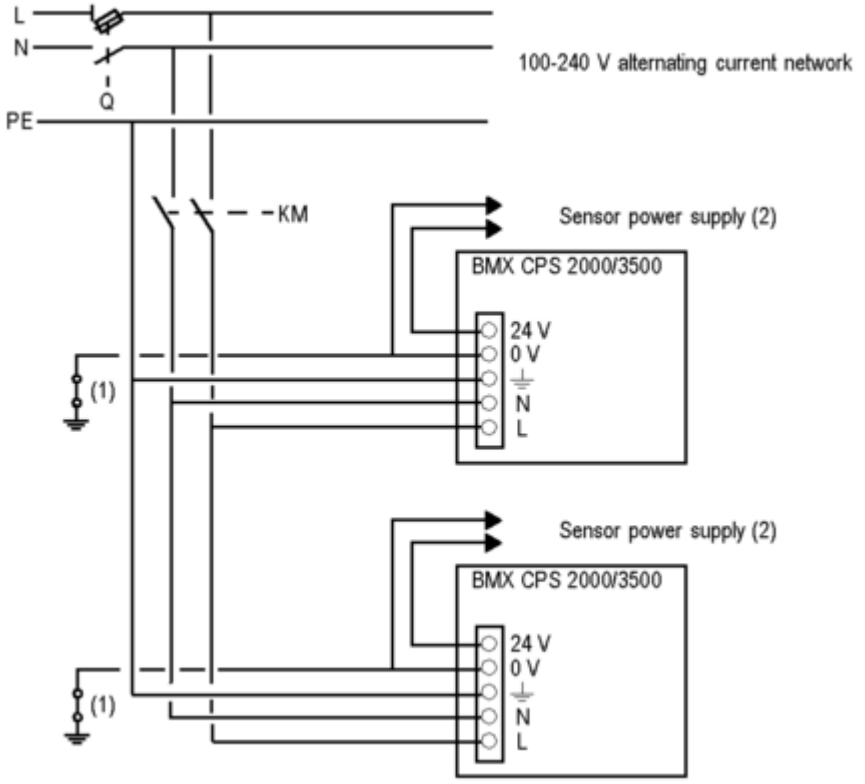

Q General isolator
KM Line contactor or circuit breaker
(1) Insulation connector bar for locating grounding errors
(2) Available current of 0.45 A for the BMXCPS2000 module or 0.9 A for the BMXCPS3500 module

Image of product / Alternate images

Alternative

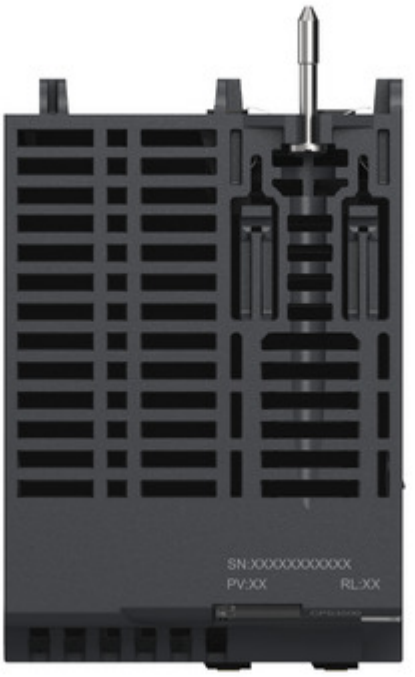



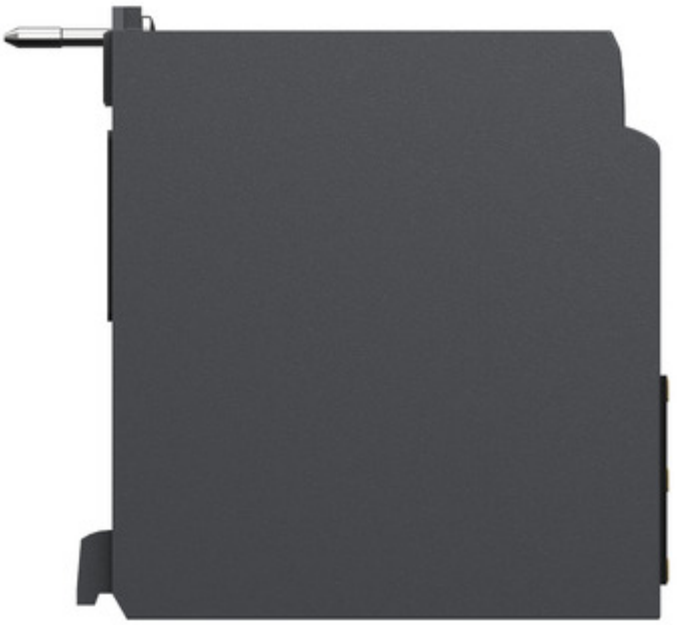

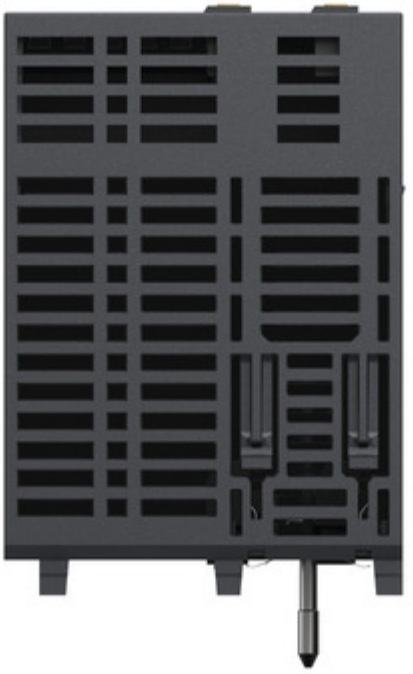


CPS3500
24V
OK
Schneider Electric
DC Out
0.9A
24V
0V
FG
AC In
100-240V
N
L
AC Power
Reset

