Product data sheet
Characteristics

LC1F400G7
TeSys F contactor - 3P (3 NO) - AC-3 - <= 440 V 400 A - coil 120 V AC



Main

Range	TeSys
Product name	TeSys F
Product or component type	Contactor
Device short name	LC1F
Contactor application	Motor control Resistive load
Utilisation category	AC-4 AC-3 AC-1
Poles description	3P
Power pole contact composition	3 NO
[Ue] rated operational voltage	<= 1000 V AC 50/60 Hz <= 460 V DC
[Ie] rated operational current	500 A 104 °F (40 °C)) <= 440 V AC AC-1 400 A 131 °F (55 °C)) <= 440 V AC AC-3
Motor power kW	75 KW 400 V AC 50/60 Hz AC-4) 200 KW 380...400 V AC 50/60 Hz AC-3) 220 KW 415 V AC 50/60 Hz AC-3) 250 KW 440 V AC 50/60 Hz AC-3) 257 KW 500 V AC 50/60 Hz AC-3) 280 KW 660...690 V AC 50/60 Hz AC-3) 185 KW 1000 V AC 50/60 Hz AC-3) 110 kW 220...230 V AC 50/60 Hz AC-3)
[Uc] control circuit voltage	120 V AC 40...400 Hz

Complementary

[Uimp] rated impulse withstand voltage	8 kV
Overvoltage category	III
[Ith] conventional free air thermal current	500 A 104 °F (40 °C)
Rated breaking capacity	3200 A IEC 60947-4-1
[Icw] rated short-time withstand current	3600 A 104 °F (40 °C) - 10 s 2400 A 104 °F (40 °C) - 30 s 1700 A 104 °F (40 °C) - 1 min 1200 A 104 °F (40 °C) - 3 min 1000 A 104 °F (40 °C) - 10 min
Associated fuse rating	400 A aM <= 440 V 500 A gG <= 440 V
Average impedance	0.26 mOhm - Ith 500 A 50 Hz
[Ui] rated insulation voltage	1000 V IEC 60947-4-1 1500 V VDE 0110 group C
Power dissipation per pole	65 W AC-1 42 W AC-3
Mounting support	Plate
Standards	JIS C8201-4-1 EN 60947-1 IEC 60947-1 EN 60947-4-1 IEC 60947-4-1

The information provided in this documentation contains general descriptions and/or technical characteristics of the performance of the products contained herein.
This documentation is not intended as a substitute for and is not to be used for determining suitability or reliability of these products for specific user applications.
It is the duty of any such user or integrator to perform the appropriate and complete risk analysis, evaluation and testing of the products with respect to the relevant specific application or use thereof.
Neither Schneider Electric Industries SAS nor any of its affiliates or subsidiaries shall be responsible or liable for misuse of the information contained herein.

Product certifications	ABS DNV RMRoS LROS (Lloyds register of shipping) UL BV CB CSA RINA
Connections - terminals	Control circuit screw clamp terminals 1 0.00…0.01 in² (1…4 mm²)flexible without cable end Control circuit screw clamp terminals 2 0.00…0.01 in² (1…4 mm²)flexible without cable end Control circuit screw clamp terminals 1 0.00…0.01 in² (1…4 mm²)flexible with cable end Control circuit screw clamp terminals 2 0.00…0.00 in² (1…2.5 mm²)flexible with cable end Control circuit screw clamp terminals 1 0.00…0.01 in² (1…4 mm²)solid without cable end Control circuit screw clamp terminals 2 0.00…0.01 in² (1…4 mm²)solid without cable end Power circuit bar 2 30 x 5 mm Power circuit lugs-ring terminals 2 0.23 in² (150 mm²) Power circuit bolted connection
Tightening torque	Control circuit 10.62 lbf.in (1.2 N.m) Power circuit 309.78 lbf.in (35 N.m)
Control circuit voltage limits	Operational 0.85...1.1 Uc 40...400 Hz 131 °F (55 °C)) Drop-out 0.3...0.5 Uc 40...400 Hz 131 °F (55 °C))
Inrush power in VA	1075 VA 40...400 Hz 0.9 68 °F (20 °C))
Hold-in power consumption in VA	15 VA 40...400 Hz 0.9 68 °F (20 °C))
Heat dissipation	14 W
Operating time	40...65 ms closing 100...170 ms opening
Mechanical durability	10 Mcycles
Maximum operating rate	2400 cyc/h 131 °F (55 °C)
Compatibility code	LC1F
Motor power range	110…220 KW 480…500 V 3 phase 110…220 KW 380…440 V 3 phase 110…220 KW 200…240 V 3 phase 250…500 kW 480…500 V 3 phase
Motor starter type	Direct on-line contactor
Contactor coil voltage	120 V AC standard

Environment

IP degree of protection	IP20 front face with shrouds IEC 60529 IP20 front face with shrouds VDE 0106
Protective treatment	TH
Ambient air temperature for operation	23…131 °F (-5…55 °C)
Ambient air temperature for storage	-76…176 °F (-60…80 °C)
Permissible ambient air temperature around the device	-40…158 °F (-40…70 °C)
Maximum Height	8.11 in (206 mm)
Maximum Width	8.39 in (213 mm)
Maximum Depth	8.62 in (219 mm)
Net Weight	20.06 lb(US) (9.1 kg)

Ordering and shipping details

Category	22336 - CTR,F-LINE,AC,OPEN,NONREV
Discount Schedule	I12
GTIN	00785901454991
Nbr. of units in pkg.	1
Package weight(Lbs)	20.5 lb(US) (9.30 kg)
Returnability	Yes
Country of origin	CZ

Packing Units

Unit Type of Package 1	PCE
Package 1 Height	9.45 in (24 cm)
Package 1 width	9.84 in (25 cm)
Package 1 Length	12.20 in (31 cm)

Offer Sustainability

Sustainable offer status	Green Premium product
California proposition 65	WARNING: This product can expose you to chemicals including: Lead and lead compounds which is known to the State of California to cause Carcinogen & Reproductive harm. For more information go to www.p65warnings.ca.gov
REACh Regulation	REACh Declaration
EU RoHS Directive	Compliant EU RoHS Declaration
Mercury free	Yes
RoHS exemption information	Yes
China RoHS Regulation	China RoHS Declaration
Environmental Disclosure	Product Environmental Profile
Circularity Profile	End Of Life Information
WEEE	The product must be disposed on European Union markets following specific waste collection and never end up in rubbish bins.

Contractual warranty

Warranty	18 months

Dimensions and Drawings

LC1 F400 and F500

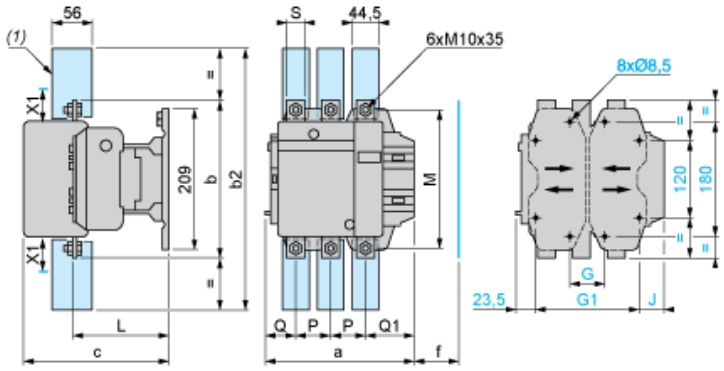

(1) Power terminal protection shroud

NOTE: X1 (mm) = Minimum electrical clearance according to operating voltage and breaking capacity.

LC1	200...500 V	600...1000 V
F400	15	20
F500	15	20

LC1		a	b	b2	c	f	G supplied	G min.	G max.	G1 supplie	G1 min.	G1 max.	J	L	M	P	Q	Q1	S
F400	2P	213	206	375	219	146	80	66	102	170	156	192	19.5	145	181	48	69	96	25
3P	213	206	375	219	146	80	66	102	170	156	192	19.5	145	181	48	43	74	25	
4P	261	206	375	219	146	80	66	150	170	156	240	67.5	145	181	48	43	74	25	
F500	2P	233	238	400	232	150	80	66	120	170	156	210	39.5	146	208	55	76	102	30
3P	233	238	400	232	150	80	66	120	170	156	210	39.5	146	208	55	46	77	30	
4P	288	238	400	232	150	140	66	175	230	156	265	34.5	146	208	55	46	77	30	

TeSys F reversing contactors and changeover contactor pairs Vertically mounted

NOTE: For customer assembly, with mechanical interlock (MI) LA9 F, fixing recommended on AM1 EC uprights (please consult your Regional Sales Office). 2 x LC1 identical or different ratings (LC1 F115 to F630 and F800).

Assembly A

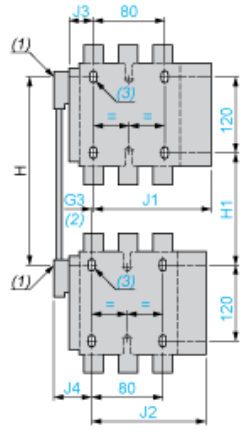

(1) Mechanical interlock shaft.
(2) For assembly of contactors of different ratings only.
(3) 4 x Ø6.5 for LC1 F115 to F225.

Assembly A[7] - Mechanical interlock reference

	G3 3P	G3 4P	H min.	H max.	H1 min.	H1 max.	J1 3P	J1 4P
LA9 FF4F	0	0	200	310	80	190	137	155.5
LA9 FG4F	3	4	210	300	90	180	139.5	159.5
LA9 FG4G	0	0	220	310	100	190	139.5	159.5

	J2 3P	J2 4P	J3 3P	J3 4P	J4 3P	J4 4P
LA9 FF4F	137	155.5	48.5	67	48.5	67
LA9 FG4F	137	155.5	53	73	54	69
LA9 FG4G	139.5	159.5	53	73	53	73

Assembly B

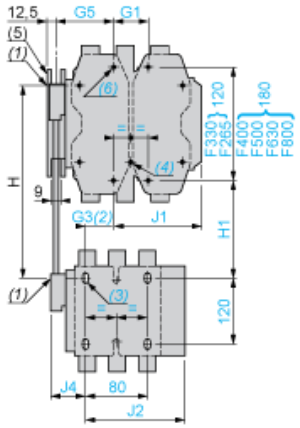

(4) 4 x Ø6.5 for LC1 F265.
(5) Mechanical interlock guide bracket.

Assembly B[7] - Mechanical interlock reference

	G1 3P	G1 4P	G3 3P	G3 4P	G5 3P	G5 4P	H min.	H max.
LA9 FH4F	96	96	21	27	60	83	240	380
LA9 FJ4F	80	80	45	26	83	83	250	380
LA9 FK4F	80	140	45	26	83	83	270	380
LA9 FL4F	180	240	35	17	74	74	310	380
LA9 FH4G	96	96	19	23	60	83	250	380
LA9 FJ4G	80	80	42	22	83	83	250	380
LA9 FK4G	80	140	42	22	83	83	270	380
LA9 FL4G	180	240	33	13	74	74	310	380

	H1 min.	H1 max.	J1 3P	J1 4P	J2 3P	J2 4P	J4 3P	J4 4P
LA9 FH4F	110	250	157.5	181.5	137	155.5	48.5	67
LA9 FJ4F	80	210	144.5	192.5	137	155.5	48.5	67
LA9 FK4F	100	210	164.5	219.5	137	155.5	48.5	67
LA9 FL4F	140	210	248.5	328.5	137	155.5	48.5	67
LA9 FH4G	120	250	157.5	181.5	139.5	159.5	53	73
LA9 FJ4G	90	220	144.5	192.5	139.5	159.5	53	73
LA9 FK4G	110	220	164.5	219.5	139.5	159.5	53	73
LA9 FL4G	150	220	248.5	328.5	139.5	159.5	53	73

Assembly C

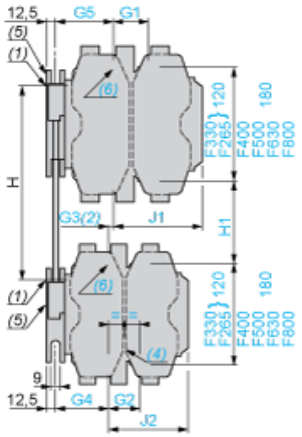

(6) 4 x Ø8.5 for LC1 F400, F500 or 4 x Ø10.5 for LC1 F630 and F800.

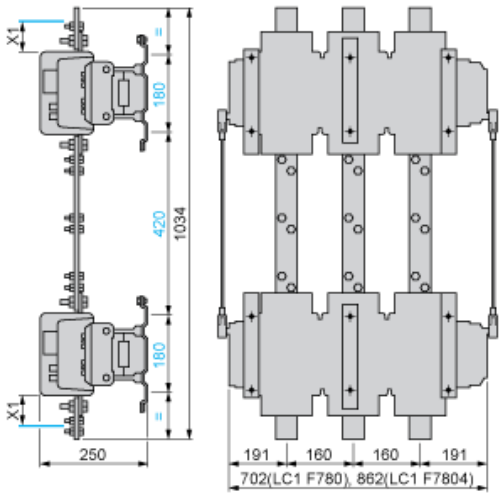

(7) Only 3P for F800.
(8) In this case, G4 is greater than G5.

Assembly C[7]

	G1 3P	G1 4P	G2 3P	G2 4P	G3 3P	G3 4P	G4 3P	G4 4P	G5 3P	G5 4P
LA9 FH4H	96	96	96	96	0	0	60	83	60	83
LA9 FJ4H	80	80	96	96	23	0	60	83	83	83
LA9 FK4H	80	140	96	96	23	0	60	83	83	83
LA9 FL4H	180	240	96	96	14	9[8]	60	83	74	74
LA9 FJ4J	80	80	80	80	0	0	83	83	83	83
LA9 FK4J	80	140	80	80	0	0	83	83	83	83
LA9 FL4J	180	240	80	80	9[8]	9[8]	83	83	74	74
LA9 FK4K	80	140	80	140	0	0	83	83	83	83
LA9 FL4K	180	240	80	140	9[8]	9[8]	83	83	74	74
LA9 FL4L	180	240	180	240	0	0	74	74	74	74

	H min.	H max.	H1 min.	H1 max.	J1 3P	J1 4P	J2 3P	J2 4P
LA9 FH4H	250	380	130	260	157.5	181.5	157.5	181.5
LA9 FJ4H	260	380	110	230	144.5	192.5	157.5	181.5
LA9 FK4H	280	380	130	230	164.5	219.5	157.5	181.5
LA9 FL4H	330	380	170	220	248.5	328.5	157.5	181.5
LA9 FJ4J	260	380	60	200	144.5	192.5	144.5	192.5
LA9 FK4J	280	380	100	200	164.5	219.5	144.5	192.5
LA9 FL4J	325	380	140	195	248.5	329.5	144.5	192.5
LA9 FK4K	300	380	120	200	164.5	329.5	164.5	219.5

	H min.	H max.	H1 min.	H1 max.	J1 3P	J1 4P	J2 3P	J2 4P
LA9 FL4K	345	380	160	195	248.5	328.5	164.5	219.5
LA9 FL4L	380	380	200	200	248.5	328.5	248.5	328.5

Connections and Schema

2, 3, and 4-pole Contactors

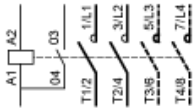

LC1 F115 to F630, F1250(coil LX1 F ∿)

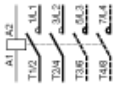

LC1 F115 to F630 , F1250 (coil LX4 F ⎓)

LC1 F115 to F265 (coil LX9 F ∿)

LC1 F800 (coil LX8 F ∿ / ⎓)