Product data sheet

Specifications



variable speed drive, Altivar 12, 0.37kW, 0.55hp, 200 to 240V, 1 phase, on base plate

ATV12P037M2

Product availability: Non-Stock - Not normally stocked in distribution facility

Main

Range of Product	Altivar 12
Product or Component Type	Variable speed drive
Product Specific Application	Simple machine
Mounting Mode	Cabinet mount
Communication Port Protocol	Modbus
Supply frequency	50/60 Hz +/- 5 %
[Us] rated supply voltage	200...240 V - 15...10 %
nominal output current	2.4 A
Motor power kW	0.37 kW
Maximum Horse Power Rating	0.55 hp
EMC filter	Integrated
IP degree of protection	IP20
Maximum Horse Power Rating	0.55 hp

Complementary

Discrete input number	4
Discrete output number	2
Analogue input number	1
Analogue output number	1
Relay output number	1
Physical interface	2-wire RS 485
Connector Type	1 RJ45
Continuous output current	2.4 A 4 kHz
Method of access	Server Modbus serial
Speed drive output frequency	0.5…400 Hz
Speed range	1…20
Sampling duration	20 ms +/- 1 ms logic input 10 ms analogue input
Linearity error	+/- 0.3 % of maximum value analogue input
Frequency resolution	Analog input converter A/D, 10 bits Display unit 0.1 Hz
Time constant	20 ms +/- 1 ms for reference change

Price is “List Price” and may be subject to a trade discount – check with your local distributor or retailer for actual price.

Disclaimer: This documentation is not intended as a substitute for and is not to be used for determining suitability or reliability of these products for specific user applications

Transmission Rate	9.6 kbit/s 19.2 kbit/s 38.4 kbit/s
Transmission frame	RTU
Number of addresses	1…247
Data format	8 bits, configurable odd, even or no parity
Communication service	Read holding registers (03) 29 words Write single register (06) 29 words Write multiple registers (16) 27 words Read/write multiple registers (23) 4/4 words Read device identification (43)
Type of polarization	No impedance
4 quadrant operation possible	False
Asynchronous motor control profile	Sensorless flux vector control Quadratic voltage/frequency ratio Voltage/frequency ratio (V/f)
Maximum output frequency	4 kHz
Transient overtorque	150…170 % of nominal motor torque depending on drive rating and type of motor
Acceleration and deceleration ramps	U Linear from 0 to 999.9 s S
Motor slip compensation	Preset in factory Adjustable
Switching frequency	2...16 kHz adjustable 4...16 kHz with derating factor
Nominal switching frequency	4 kHz
Braking to standstill	By DC injection
Brake chopper integrated	False
Line current	5.9 A 100 V heavy duty) 4.9 A 120 V heavy duty)
Maximum Input Current per Phase	4.9 A
Maximum output voltage	240 V
Apparent power	1.2 kVA 240 V heavy duty)
Maximum transient current	3.6 A 60 s heavy duty) 4.0 A 2 s heavy duty)
Network Frequency	50-60 Hz
Relative symmetric network frequency tolerance	5 %
Prospective line Isc	1 kA
Base load current at high overload	2.4 A
Power dissipation in W	Natural 27.0 W
With safety function Safely Limited Speed (SLS)	False
With safety function Safe brake management (SBC/SBT)	False
With safety function Safe Operating Stop (SOS)	False
With safety function Safe Position (SP)	False
With safety function Safe programmable logic	False
With safety function Safe Speed Monitor (SSM)	False

With safety function Safe Stop 1 (SS1)	False
With sft fct Safe Stop 2 (SS2)	False
With safety function Safe torque off (STO)	False
With safety function Safely Limited Position (SLP)	False
With safety function Safe Direction (SDI)	False
Protection type	Line supply overvoltage Line supply undervoltage Overcurrent between output phases and earth Overheating protection Short-circuit between motor phases Against input phase loss in three-phase Thermal motor protection via the drive by continuous calculation of I^2t
Tightening torque	7.08 lbf.in (0.8 N.m)
Insulation	Electrical between power and control
Quantity per Set	Set of 1
Width	2.8 in (72 mm)
Height	5.6 in (143 mm)
Depth	4.02 in (102.2 mm)
Product Weight	1.5 lb(US) (0.7 kg)

Environment

Operating altitude	> 3280.84...6561.68 ft (> 1000...2000 m) with current derating 1 % per 100 m <= 3280.84 ft (1000 m) without derating
Operating position	Vertical +/- 10 degree
Product Certifications	NOM CSA C-tick UL GOST RCM KC
Marking	CE
Standards	UL 508C UL 618000-5-1 IEC 61800-5-1 IEC 61800-3
Assembly style	On base plate
Electromagnetic compatibility	Electrical fast transient/burst immunity test level 4 conforming to IEC 61000-4-4 Electrostatic discharge immunity test level 3 conforming to IEC 61000-4-2 Immunity to conducted disturbances level 3 conforming to IEC 61000-4-6 Radiated radio-frequency electromagnetic field immunity test level 3 conforming to IEC 61000-4-3 Surge immunity test level 3 conforming to IEC 61000-4-5 Voltage dips and interruptions immunity test conforming to IEC 61000-4-11
Environmental class (during operation)	Class 3C3 according to IEC 60721-3-3 Class 3S2 according to IEC 60721-3-3
Maximum acceleration under shock impact (during operation)	150 m/s^2 at 11 ms
Maximum acceleration under vibrational stress (during operation)	10 m/s^2 at 13...200 Hz
Maximum deflection under vibratory load (during operation)	1.5 mm at 2...13 Hz
Overvoltage category	Class III
Regulation loop	Adjustable PID regulator

Electromagnetic emission	Radiated emissions environment 1 category C2 IEC 61800-3 2...16 kHz shielded motor cable Conducted emissions with integrated EMC filter environment 1 category C1 IEC 61800-3 2, 4, 8, 12 and 16 kHz shielded motor cable <16.4 ft (5 m) Conducted emissions with integrated EMC filter environment 1 category C2 IEC 61800-3 2...12 kHz shielded motor cable <16.4 ft (5 m) Conducted emissions with integrated EMC filter environment 1 category C2 IEC 61800-3 2, 4 and 16 kHz shielded motor cable <32.8 ft (10 m) Conducted emissions with additional EMC filter environment 1 category C1 IEC 61800-3 4...12 kHz shielded motor cable <65.6 ft (20 m) Conducted emissions with additional EMC filter environment 1 category C2 IEC 61800-3 4...12 kHz shielded motor cable <164.04 ft (50 m) Conducted emissions with additional EMC filter environment 2 category C3 IEC 61800-3 4...12 kHz shielded motor cable <164.04 ft (50 m)
Vibration resistance	1 gn 13…200 Hz)IEC 60068-2-6 1.5 mm peak to peak 3…13 Hz) - drive unmounted on symmetrical DIN rail - IEC 60068-2-6
Shock resistance	15 gn 11 ms IEC 60068-2-27
Relative humidity	5…95 % without condensation IEC 60068-2-3 5…95 % without dripping water IEC 60068-2-3
Noise level	0 dB
Pollution degree	2
Ambient air transport temperature	-13…158 °F (-25…70 °C)
Ambient air temperature for operation	14…104 °F (-10…40 °C) without derating 104…140 °F (40…60 °C) with current derating 2.2 % per °C
Ambient Air Temperature for Storage	-13…158 °F (-25…70 °C)

Ordering and shipping details

Category	US1CP4B22042
Discount Schedule	CP4B
GTIN	3606480071119
Returnability	Yes
Country of origin	ID

Packing Units

Unit Type of Package 1	PCE
Nbr. of units in pkg.	1
Package 1 Height	4.724 in (12.000 cm)
Package 1 Width	7.362 in (18.700 cm)
Package 1 Length	7.677 in (19.500 cm)
Package weight(Lbs)	32.557 oz (923.000 g)
Unit Type of Package 2	S06
Number of Units in Package 2	45
Package 2 Height	29.528 in (75.000 cm)
Package 2 Width	23.622 in (60.000 cm)
Package 2 Length	31.496 in (80.000 cm)
Package 2 Weight	121.420 lb(US) (55.075 kg)

Contractual warranty

Warranty (in months)	18

Environmental Data

Schneider Electric aims to achieve Net Zero status by 2050 through supply chain partnerships, lower impact materials, and circularity via our ongoing “Use Better, Use Longer, Use Again” campaign to extend product lifetimes and recyclability.

Environmental Data explained >

How we assess product sustainability >

Use Better

Materials and Substances

Packaging made with recycled cardboard	**Yes**
Packaging without single use plastic	**Yes**
SCIP Number	**488b1fd0-df04-41cb-85a8-34a5a8230847**
EU RoHS Directive	**Compliant By Exemption**
REACh Regulation	**Reference contains Substances of Very High Concern above the threshold**
California proposition 65	**WARNING: This product can expose you to chemicals including: Lead and lead compounds, which is known to the State of California to cause cancer and birth defects or other reproductive harm. For more information go to www.P65Warnings.ca.gov**

Energy efficiency

Product contributes to saved and avoided emissions	**Yes**

Use Longer

Lifetime extension

Repair	**No**

Use Again

Repack and remanufacture

Take-back	**No**
WEEE Label	**The product must be disposed on European Union markets following specific waste collection and never end up in rubbish bins.**

Dimensions Drawings

Dimensions

Drive without EMC Conformity Kit

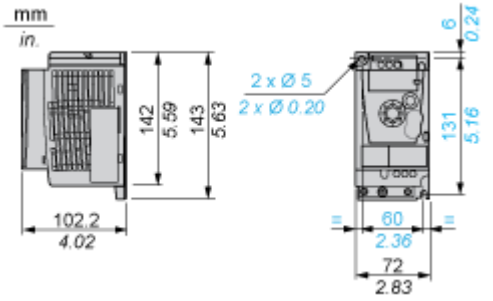

Drive with EMC Conformity Kit

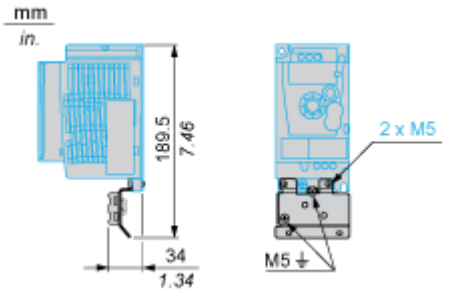

Mounting and Clearance

Mounting Recommendations

Clearance for Vertical Mounting

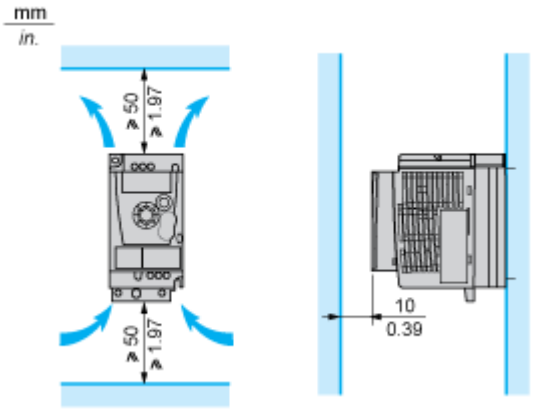

Mounting Type A

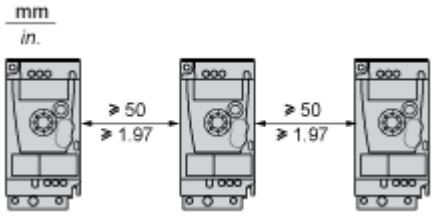

Mounting Type B

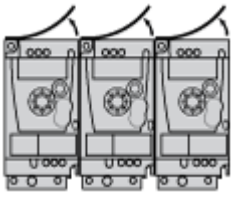

Remove the protective cover from the top of the drive.

Mounting Type C

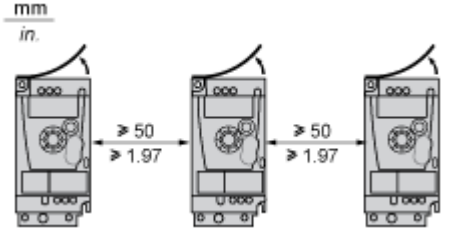

Remove the protective cover from the top of the drive.

Connections and Schema

Single-Phase Power Supply Wiring Diagram

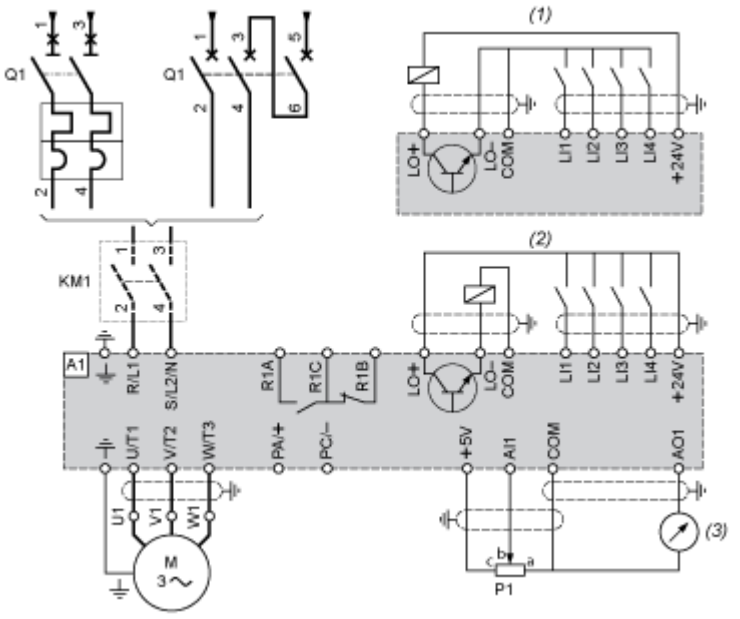

A1 Drive

KM1 Contactor (only if a control circuit is needed)

P1 2.2 kΩ reference potentiometer. This can be replaced by a 10 kΩ potentiometer (maximum).

Q1 Circuit breaker

(1) Negative logic (Sink)

(2) Positive logic (Source) (factory set configuration)

(3) 0...10 V or 0...20 mA

Recommended Schemes

2-Wire Control for Logic I/O with Internal Power Supply

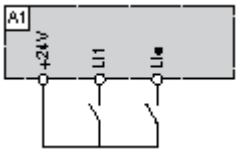

LI1 : Forward

LI• : Reverse

A1 : Drive

3-Wire Control for Logic I/O with Internal Power Supply

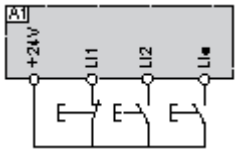

LI1 : Stop

LI2 : Forward

LI• : Reverse

A1 : Drive

Analog Input Configured for Voltage with Internal Power Supply

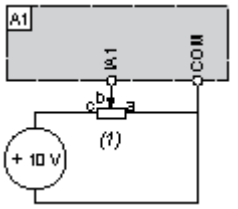

(1) 2.2 kΩ…10 kΩ reference potentiometer

A1 : Drive

Analog Input Configured for Current with Internal Power Supply

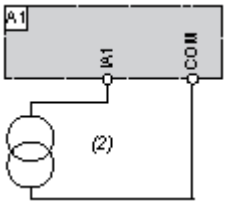

(2) 0-20 mA 4-20 mA supply

A1 : Drive

Connected as Positive Logic (Source) with External 24 vdc Supply

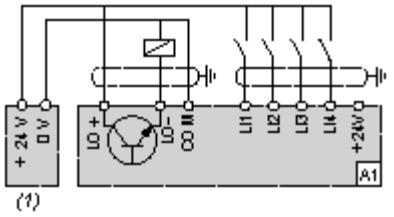

(1) 24 vdc supply

A1 : Drive

Connected as Negative Logic (Sink) with External 24 vdc supply

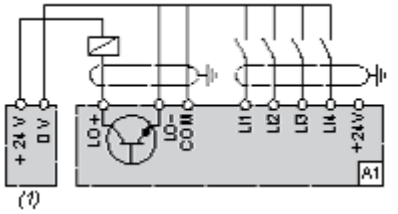

(1) 24 vdc supply

A1 : Drive

Performance Curves

Torque Curves

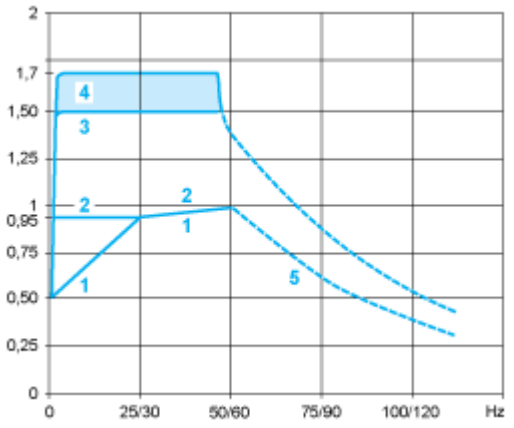

1 : Self-cooled motor: continuous useful torque **(1)**

2 : Force-cooled motor: continuous useful torque

3 : Transient overtorque for 60 s

4 : Transient overtorque for 2 s

5 : Torque in overspeed at constant power **(2)**

(1) For power ratings ≤ 250 W, derating is 20% instead of 50% at very low frequencies.

(2) The nominal motor frequency and the maximum output frequency can be adjusted from 0.5 to 400 Hz. The mechanical overspeed capability of the selected motor must be checked with the manufacturer.