Product data sheet

Specifications



servo motor BMH, Lexium 32, 2.5Nm, 8000rpm, keyed shaft, without brake, IP54, 128 multiturn encoder, 3 phases

BMH0702P12A2A

Product availability: Stock - Normally stocked in distribution facility

Main

Device short name	BMH
Product or Component Type	Servo motor
Maximum mechanical speed	8000 rpm
Continuous stall torque	22.1 lbf.in (2.5 N.m) LXM32.D12N4 3 A, 400 V, three phase 22.1 lbf.in (2.5 N.m) LXM32.D12N4 3 A, 480 V, three phase
Peak stall torque	65.5 lbf.in (7.4 N.m) LXM32.D12N4 3 A, 400 V, three phase 65.5 lbf.in (7.4 N.m) LXM32.D12N4 3 A, 480 V, three phase
Nominal output power	700 W LXM32.D12N4 3 A, 400 V, three phase 700 W LXM32.D12N4 3 A, 480 V, three phase
Nominal torque	19.5 lbf.in (2.2 N.m) LXM32.D12N4 3 A, 400 V, three phase 19.5 lbf.in (2.2 N.m) LXM32.D12N4 3 A, 480 V, three phase
Nominal speed	3000 rpm LXM32.D12N4 3 A, 400 V, three phase 3000 rpm LXM32.D12N4 3 A, 480 V, three phase
Product compatibility	LXM32.D12N4 400...480 V three phase
Shaft end	Keyed
IP Degree of Protection	IP54 standard
Speed feedback resolution	131072 points/turn x 4096 turns
Holding brake	Without
Mounting Support	International standard flange
Electrical Connection	Rotatable right-angled connectors

Complementary

Range Compatibility	Lexium 32
[Us] rated supply voltage	480 V
Phase	Three phase
Continuous stall current	2.94 A
Continuous power	1.51 W
Maximum current Irms	9.65 A LXM32.D12N4
Maximum permanent current	9.68 A
Second shaft	Without second shaft end
Shaft diameter	0.4 in (11 mm)
Shaft length	0.9 in (23 mm)
Key width	0.7 in (18 mm)

Price is “List Price” and may be subject to a trade discount – check with your local distributor or retailer for actual price.

Disclaimer: This documentation is not intended as a substitute for and is not to be used for determining suitability or reliability of these products for specific user applications

Feedback type	Multiturn SinCos Hiperface
Motor flange size	2.8 in (70 mm)
Number of motor stacks	2
Torque constant	0.84 N.m/A 248 °F (120 °C)
Back emf constant	54.08 V/krpm 248 °F (120 °C)
Number of motor poles	5.0
Rotor inertia	1.13 kg.cm²
Stator resistance	3.8 Ohm 68 °F (20 °C)
Stator inductance	5.89 mH 68 °F (20 °C)
Stator electrical time constant	3.2 ms 68 °F (20 °C)
Maximum radial force Fr	710 N 1000 rpm 560 N 2000 rpm 490 N 3000 rpm 450 N 4000 rpm 410 N 5000 rpm 390 N 6000 rpm
Maximum axial force Fa	0.2 x Fr
Type of cooling	Natural convection
Length	6.06 in (154 mm)
Centring collar diameter	2.4 in (60 mm)
Centring collar depth	0.10 in (2.5 mm)
Number of mounting holes	4
Mounting holes diameter	0.2 in (5.5 mm)
Circle diameter of the mounting holes	3.2 in (82 mm)
Product Weight	5.07 lb(US) (2.3 kg)
Sizing reference	BMH0702P
Network number of phases	3
Accuracy error [angular]	1.4 °
Temperature copper hot	275 °F (135 °C)
Temperature magnet hot	212 °F (100 °C)
Temperature magnet rt	68 °F (20 °C)
Output current 3s peak	9.65 A
Inertia	0.0 kg.cm² of brake 1.129 kg.cm² of motor

Ordering and shipping details

Category	US1PC5318282
Discount Schedule	PC53
GTIN	3606485193618
Returnability	Yes
Country of origin	DE

Packing Units

Unit Type of Package 1	PCE

Nbr. of units in pkg.	1
Package 1 Height	4.6 in (11.8 cm)
Package 1 Width	6.9 in (17.5 cm)
Package 1 Length	14.9 in (37.8 cm)
Package weight(Lbs)	6.484 lb(US) (2.941 kg)
Unit Type of Package 2	S02
Number of Units in Package 2	2
Package 2 Height	5.9 in (15 cm)
Package 2 Width	11.8 in (30 cm)
Package 2 Length	15.7 in (40 cm)
Package 2 Weight	13.541 lb(US) (6.142 kg)
Unit Type of Package 3	P06
Number of Units in Package 3	32
Package 3 Height	29.528 in (75.000 cm)
Package 3 Width	23.622 in (60.000 cm)
Package 3 Length	31.496 in (80.000 cm)
Package 3 Weight	234.290 lb(US) (106.272 kg)

Contractual warranty

Warranty (in months)	18

Environmental Data

Schneider Electric aims to achieve Net Zero status by 2050 through supply chain partnerships, lower impact materials, and circularity via our ongoing “Use Better, Use Longer, Use Again” campaign to extend product lifetimes and recyclability.

Environmental Data explained >

How we assess product sustainability >

Environmental footprint

Total lifecycle Carbon footprint	**786 kg CO2 eq.**
Carbon footprint of the manufacturing phase [A1 to A3]	**21 kg CO2 eq.**
Carbon footprint of the distribution phase [A4]	**0.4 kg CO2 eq.**
Carbon footprint of the installation phase [A5]	**0 kg CO2 eq.**
Carbon footprint of the use phase [B2, B3, B4, B6]	**764 kg CO2 eq.**
Carbon footprint of the end-of-life phase [C1 to C4]	**0.2 kg CO2 eq.**

Use Better

Materials and Substances

Packaging made with recycled cardboard	**Yes**
Packaging without single use plastic	**Yes**
SCIP Number	**A7df881f-135f-4256-b8c2-ea55d4c9a151**
EU RoHS Directive	**Compliant By Exemption**
REACh Regulation	**Reference contains Substances of Very High Concern above the threshold**
California proposition 65	**WARNING: This product can expose you to chemicals including: Lead and lead compounds, which is known to the State of California to cause cancer and birth defects or other reproductive harm. For more information go to www.P65Warnings.ca.gov**
PVC free	**Yes**

Use Longer

Lifetime extension

Repair	**No**

Use Again

Repack and remanufacture

Circularity Profile	**No need of specific recycling operations**
Take-back	**No**
WEEE Label	**The product must be disposed on European Union markets following specific waste collection and never end up in rubbish bins.**

Dimensions Drawings

Servo Motors Dimensions

Example with Straight Connectors

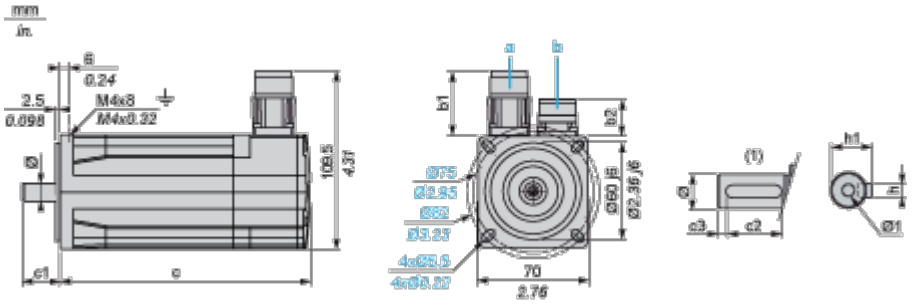

a: Power supply for servo motor brake

b: Power supply for servo motor encoder

(1) Shaft end, keyed slot (optional)

Dimensions in mm

Straight connectors		Rotatable angled connectors		c (without brake)	c (with brake)	c1	c2	c3	h	h1	Ø	Ø1 for screws
b1	b2	b1	b2									
39.5	25.5	39.5	39.5	154	193	23	18	2.5	4 h9	$12.5^{+0}_{-0.13}$	11 k6	M4 x 14

Dimensions in in.

Straight connectors		Rotatable angled connectors		c (without brake)	c (with brake)	c1	c2	c3	h	h1	Ø	Ø1 for screws
b1	b2	b1	b2									
1.55	1	1.55	1.55	6.06	7.59	0.90	0.70	0.09	0.16 h9	$0.49^{+0}_{-0.0051}$	0.43 k6	M4 x 0.55

Performance Curves

400 V 3-Phase Supply Voltage

Torque/Speed Curves

Servo motor with LXM32•D12N4 servo drive

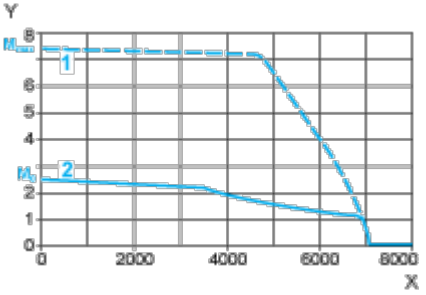

X Speed in rpm

Y Torque in Nm

1 Peak torque

2 Continuous torque

480 V 3-Phase Supply Voltage

Torque/Speed Curves

Servo motor with LXM32•D12N4 servo drive

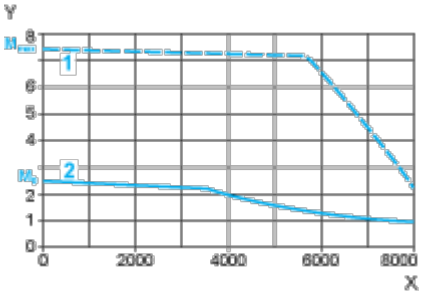

X Speed in rpm

Y Torque in Nm

1 Peak torque

2 Continuous torque