Product data sheet

Specifications



Harmony, pendant station, pistol grip, yellow, 2 push buttons

XACA201

Product availability: Stock - Normally stocked in distribution facility

Main

Range of Product	Harmony XAC
Product or Component Type	Pendant control station
Device short name	XACA pistol grip

Complementary

Control station type	Double insulated
Enclosure Material	Polypropylene
Control Type	Intuitive
Electrical circuit type	Control circuit
Enclosure Type	Complete ready for use
Control station application	Control of single speed hoist motor
Control station composition	2 push-buttons
Control button type	First push-button 1 NO raise, slow Second push-button 1 NO lower, slow
Product compatibility	ZB2BE101 for each direction
Mechanical interlocking	With mechanical interlocking
Control station colour	Yellow
Connections - terminals	Screw clamp terminals, 1 x 2.5 mm² with or without cable end Screw clamp terminals, 2 x 1.5 mm² with or without cable end
Standards	IEC 60947-5-1 CSA C22.2 No 14 IEC 60204-32 UL 508
Product Certifications	CSA UL
Protective treatment	TH
Ambient Air Temperature for Operation	-13…158 °F (-25…70 °C)
Ambient Air Temperature for Storage	-40…158 °F (-40…70 °C)
Vibration resistance	15 gn (f= 10…500 Hz) conforming to IEC 60068-2-6
Shock resistance	100 gn IEC 60068-2-27
Overvoltage category	Class II conforming to IEC 61140
IP degree of protection	IP65 conforming to IEC 60529
IK degree of protection	IK08 conforming to IEC 62262
Mechanical durability	1000000 cycles

Price is “List Price” and may be subject to a trade discount – check with your local distributor or retailer for actual price.

Disclaimer: This documentation is not intended as a substitute for and is not to be used for determining suitability or reliability of these products for specific user applications

Cable entry	Rubber sleeve with stepped entry 0.3…0.6 in (7…15 mm)
Contact code designation	A600 AC-15, Ue = 240 V, Ie = 3 A IEC 60947-5-1 appendix A A600 AC-15, Ue = 600 V, Ie = 1.2 A IEC 60947-5-1 appendix A Q600 DC-13, Ue = 250 V, Ie = 0.27 A IEC 60947-5-1 appendix A Q600 DC-13, Ue = 600 V, Ie = 0.1 A IEC 60947-5-1 appendix A
[Ithe] conventional enclosed thermal current	10 A
[Ui] rated insulation voltage	600 V 3)IEC 60947-1
[Uimp] rated impulse withstand voltage	6 kV IEC 60947-1
Contact operation	Slow-break
Maximum resistance across terminals	25 MOhm
Operating force	13…15 N
Short-circuit protection	10 A fuse protection cartridge gG
Rated operational power in W	40 W DC-13 1000000 cycles 60 cyc/mn 120 V 0.5 inductive IEC 60947-5-1 appendix C 48 W DC-13 1000000 cycles 60 cyc/mn 48 V 0.5 inductive IEC 60947-5-1 appendix C 65 W DC-13 1000000 cycles 60 cyc/mn 24 V 0.5 inductive IEC 60947-5-1 appendix C
Terminals description ISO n°1	(13-14)NO
Terminal identifier	(11-12)NC (13-14)NO
Product Weight	0.60 lb(US) (0.27 kg)

Ordering and shipping details

Category	US10CS222473
Discount Schedule	0CS2
GTIN	3389110645002
Returnability	Yes
Country of origin	FR

Packing Units

Unit Type of Package 1	PCE
Nbr. of units in pkg.	1
Package 1 Height	2.953 in (7.500 cm)
Package 1 Width	2.362 in (6.000 cm)
Package 1 Length	10.630 in (27.000 cm)
Package weight(Lbs)	8.889 oz (252.000 g)
Unit Type of Package 2	S02
Number of Units in Package 2	6
Package 2 Height	5.906 in (15.000 cm)
Package 2 Width	11.811 in (30.000 cm)
Package 2 Length	15.748 in (40.000 cm)
Package 2 Weight	4.012 lb(US) (1.820 kg)
Unit Type of Package 3	P06
Number of Units in Package 3	96

Package 3 Height	29.528 in (75.000 cm)
Package 3 Width	23.622 in (60.000 cm)
Package 3 Length	31.496 in (80.000 cm)
Package 3 Weight	89.393 lb(US) (40.548 kg)

Contractual warranty

Warranty (in months)	18

Environmental Data

Schneider Electric aims to achieve Net Zero status by 2050 through supply chain partnerships, lower impact materials, and circularity via our ongoing “Use Better, Use Longer, Use Again” campaign to extend product lifetimes and recyclability.

Environmental Data explained >

How we assess product sustainability >

Environmental footprint

Total lifecycle Carbon footprint	**2 kg CO2 eq.**
Carbon footprint of the manufacturing phase [A1 to A3]	**1 kg CO2 eq.**
Carbon footprint of the distribution phase [A4]	**0.1 kg CO2 eq.**
Carbon footprint of the installation phase [A5]	**0 kg CO2 eq.**
Carbon footprint of the use phase [B2, B3, B4, B6]	**0 kg CO2 eq.**
Carbon footprint of the end-of-life phase [C1 to C4]	**0.2 kg CO2 eq.**
Environmental Disclosure	**Product Environmental Profile**

Use Better

Materials and Substances

Packaging made with recycled cardboard	**Yes**
Packaging without single use plastic	**No**
EU RoHS Directive	**Compliant**
REACh Regulation	**Free of Substances of Very High Concern above the threshold**
California proposition 65	**WARNING: This product can expose you to chemicals including: Nickel compounds, which is known to the State of California to cause cancer, and Di-isodecyl phthalate (DIDP), which is known to the State of California to cause birth defects or other reproductive harm. For more information go to www.P65Warnings.ca.gov**

Use Longer

Lifetime extension

Repair	**No**

Use Again

Repack and remanufacture

Recyclability potential, in %	**32**
Circularity Profile	**No need of specific recycling operations**
Take-back	**No**
WEEE Label	**The product must be disposed on European Union markets following specific waste collection and never end up in rubbish bins.**

Dimensions Drawings

Dimensions

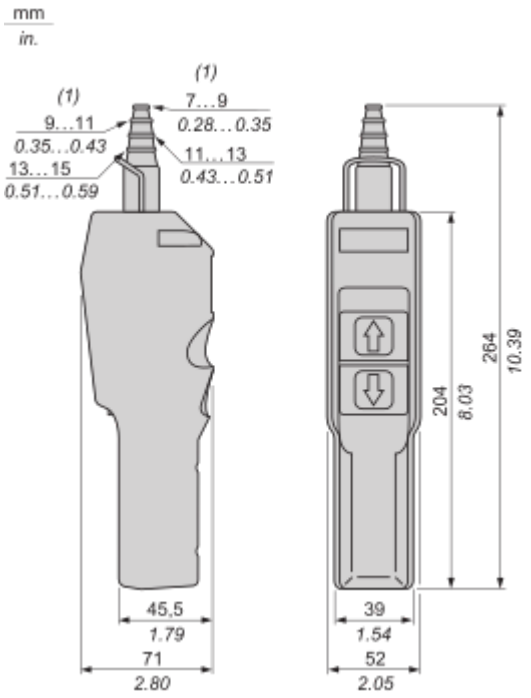

(1) Internal Ø

Connections and Schema

Control of Single-Speed Reversing Motor

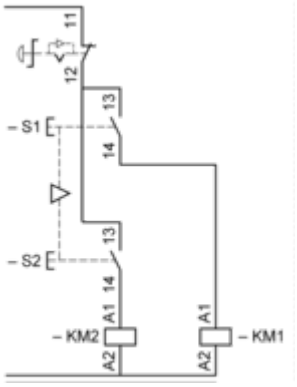

Performance Curves

Rated Operational Power

AC Supply 50/60 Hz Inductive Circuit

Operating rate: 3600 operating cycles/hour. Load factor: 0.5.
Millions of operating cycles, AC-15 utilization category

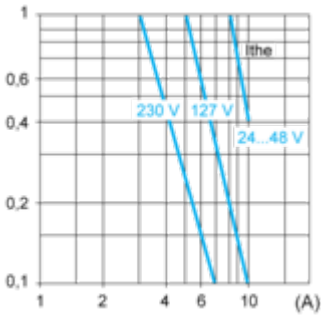

Ithe Thermal current
(A) Current

DC Supply

Operating rate: 3600 operating cycles/hour. Load factor: 0.5.
Power broken in W for 1 million operating cycles, DC-13 utilization category

Voltage	V	24	48	120
Inductive circuit	W	65	48	40

Technical Illustration

Dimensions

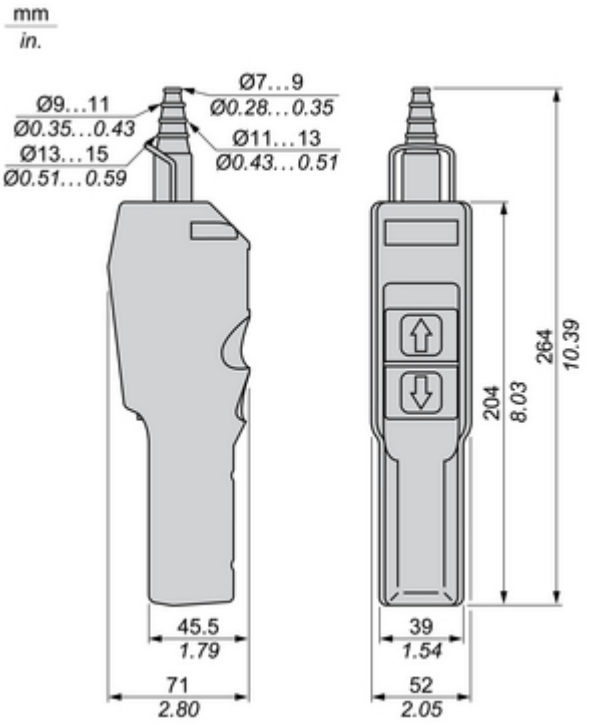

Technical Illustration

Wiring diagram

Control of Single-Speed Reversing Motor

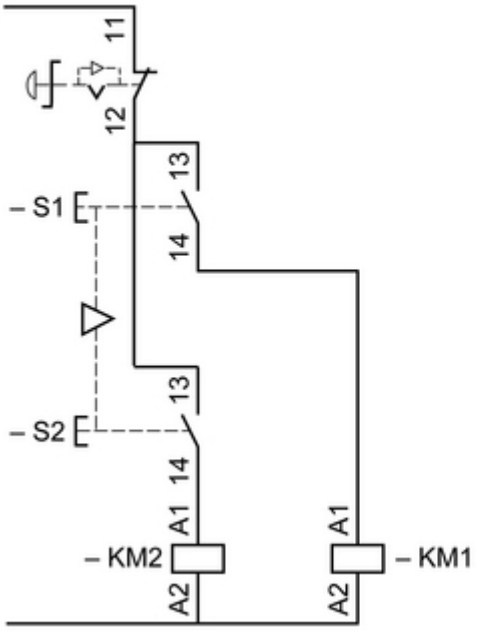

Image of product / Alternate images

Alternative









