Product data sheet

Specifications



variable speed drive, Altivar Process ATV900, ATV930, 55kW, 75hp, 500 to 690V, IP00

ATV930D55Y6

Product availability: Stock - Normally stocked in distribution facility

Main

Range of Product	Altivar Process ATV900
Product Specific Application	Process for industrial
Product or Component Type	Variable speed drive
Variant	With braking chopper Standard version
Device Application	Industrial Application
Product destination	Asynchronous motors Synchronous motors
Phase	3 phase
Mounting Mode	Wall mount
Continuous output current	66 A 2.5 kHz normal duty 55 A 2.5 kHz heavy duty
Communication Port Protocol	Modbus serial EtherNet/IP Modbus TCP
option module	Slot A communication module Profibus DP V1 Slot A communication module PROFINET Slot A communication module DeviceNet Slot A communication module EtherCAT Slot A communication module CANopen daisy chain RJ45 Slot A communication module CANopen SUB-D 9 Slot A communication module CANopen screw terminals Slot A/slot B/slot C digital and analog I/O extension module Slot A/slot B/slot C output relay extension module Slot B 5/12 V digital encoder interface module Slot B analog encoder interface module Slot B resolver encoder interface module communication module Ethernet Powerlink
[Us] rated supply voltage	500...690 V - 15...10 %
[Us] rated supply voltage	500...690 V
Relative symmetric mains voltage tolerance	10 %
Relative symmetric network frequency tolerance	5 %
nominal output current	66.0 A
Motor power kW	45.0 kW normal duty 37.0 kW heavy duty
EMC filter	Integrated With EMC plate option
IP degree of protection	IP21
Degree of protection	UL type 1

Complementary

Price is “List Price” and may be subject to a trade discount – check with your local distributor or retailer for actual price.

Disclaimer: This documentation is not intended as a substitute for and is not to be used for determining suitability or reliability of these products for specific user applications

Electrical connection	Control screw terminal 0.5...1.5 mm² AWG 20...AWG 16 Line side screw terminal 25...50 mm² AWG 4...AWG 1 Motor screw terminal 25...50 mm² AWG 4...AWG 1 DC bus screw terminal 25...50 mm² AWG 4...AWG 1
Transmission Rate	10/100 Mbit/s Ethernet IP/Modbus TCP 4.8, 9.6, 19.2, 38.4 kbit/s Modbus serial
Exchange mode	Half duplex, full duplex, autonegotiation Ethernet IP/Modbus TCP
Data format	8 bits, configurable odd, even or no parity Modbus serial
Type of polarization	No impedance Modbus serial
Number of addresses	1…247 Modbus serial
Supply	External supply for digital inputs 24 V DC 19…30 V), <1.25 mA overload and short-circuit protection Internal supply for reference potentiometer (1 to 10 kOhm) 10.5 V DC +/- 5 %, <10 mA overload and short-circuit protection Internal supply for digital inputs and STO 24 V DC 21…27 V), <200 mA overload and short-circuit protection
Local signalling	Local diagnostic: 3 LED (mono/dual colour) Presence of voltage: 1 LED (red) Embedded communication status: 3 LED (dual colour) Communication module status: 4 LED (dual colour)
Input compatibility	DI1...DI8 discrete input level 1 PLC IEC 61131-2 DI7, DI8 pulse input level 1 PLC IEC 65A-68 STOA, STOB discrete input level 1 PLC IEC 61131-2
Discrete input logic	Positive logic (source) DI1...DI8), < 5 V, > 11 V Negative logic (sink) DI1...DI8), > 16 V, < 10 V Positive logic (source) DI7, DI8), < 0.6 V, > 2.5 V Positive logic (source) STOA, STOB), < 5 V, > 11 V
Sampling duration	2 ms +/- 0.5 ms DI1...DI8) - discrete input 5 ms +/- 1 ms DI7, DI8) - pulse input 1 ms +/- 1 ms AI1, AI2, AI3) - analog input 5 ms +/- 1 ms AQ1, AQ2) - analog output
Accuracy	+/- 0.6 % AI1, AI2, AI3 for a temperature variation 60 °C analog input +/- 1 % AQ1, AQ2 for a temperature variation 60 °C analog output
Linearity error	AI1, AI2, AI3 +/- 0.15 % of maximum value analog input AQ1, AQ2 +/- 0.2 % analog output
Refresh time	Relay output R1, R2, R3)5 ms +/- 0.5 ms)
Isolation	Between power and control terminals
Discrete input number	10
Discrete input type	DI1...DI8 programmable, 24 V DC <= 30 V)3.5 kOhm DI7, DI8 programmable as pulse input 0…30 kHz, 24 V DC <= 30 V) STOA, STOB safe torque off, 24 V DC <= 30 V)> 2.2 kOhm
Discrete output number	2
Discrete output type	Logic output DQ+ 0…1 kHz <= 30 V DC 100 mA Programmable as pulse output DQ+ 0…30 kHz <= 30 V DC 20 mA Logic output DQ- 0…1 kHz <= 30 V DC 100 mA
Analogue input number	3
Analogue input type	AI1, AI2, AI3 software-configurable voltage 0...10 V DC 30 kOhm 12 bits AI1, AI2, AI3 software-configurable current 0...20 mA/4...20 mA 250 Ohm 12 bits
Analogue output number	2
Analogue output type	Software-configurable voltage AQ1, AQ2 0...10 V DC 470 Ohm 10 bits Software-configurable current AQ1, AQ2 0...20 mA 500 Ohm 10 bits
Relay output number	3
Relay output type	Configurable relay logic R1 fault relay NO/NC 100000 cycles Configurable relay logic R2 sequence relay NO 1000000 cycles Configurable relay logic R3 sequence relay NO 1000000 cycles

Maximum switching current	Relay output R1 resistive, cos phi = 1 3 A 250 V AC Relay output R1 resistive, cos phi = 1 3 A 30 V DC Relay output R1 inductive, cos phi = 0.4 7 ms 2 A 250 V AC Relay output R1 inductive, cos phi = 0.4 7 ms 2 A 30 V DC Relay output R2, R3 resistive, cos phi = 1 5 A 250 V AC Relay output R2, R3 resistive, cos phi = 1 5 A 30 V DC Relay output R2, R3 inductive, cos phi = 0.4 7 ms 2 A 250 V AC Relay output R2, R3 inductive, cos phi = 0.4 7 ms 2 A 30 V DC
Minimum switching current	Relay output R1, R2, R3 5 mA 24 V DC
Discrete input logic	16 preset speeds
Physical interface	Ethernet 2-wire RS 485
Connector Type	2 RJ45 1 RJ45
Method of access	Slave Modbus TCP
Transmission Rate	10, 100 Mbits 4.8 kbps 9600 bit/s 19200 bit/s
Transmission frame	RTU
Number of addresses	1…247
Data format	8 bits, configurable odd, even or no parity
Type of polarization	No impedance
4 quadrant operation possible	True
Asynchronous motor control profile	Variable torque standard Optimized torque mode Constant torque standard
Synchronous motor control profile	Permanent magnet motor Synchronous reluctance motor
Maximum output frequency	599 Hz
Acceleration and deceleration ramps	Linear adjustable separately from 0.01...9999 s S, U or customized
Motor slip compensation	Can be suppressed Automatic whatever the load Adjustable Not available in permanent magnet motor law
Switching frequency	1...4.9 kHz adjustable 2.5...4.9 kHz with derating factor
Nominal switching frequency	2.5 kHz
Braking to standstill	By DC injection
Brake chopper integrated	True
Line current	65.5 A 500 V normal duty) 55.6 A 500 V heavy duty) 62.5 A 690 V normal duty) 54.4 A 690 V heavy duty)
Maximum Input Current per Phase	65.5 A
Maximum output voltage	690.0 V
Apparent power	74.7 kVA 690 V normal duty) 65 kVA 690 V heavy duty)
Maximum transient current	79.2 A 60 s normal duty) 82.5 A 60 s heavy duty)
Network Frequency	50-60 Hz
Prospective line Isc	70 kA

Base load current at high overload	55.0 A
Base load current at low overload	66.0 A
Power dissipation in W	Forced convection 858 W 500 V 2.5 kHz Natural convection 227 W 500 V 2.5 kHz
With safety function Safely Limited Speed (SLS)	True
With safety function Safe brake management (SBC/SBT)	True
With safety function Safe Operating Stop (SOS)	False
With safety function Safe Position (SP)	False
With safety function Safe programmable logic	False
With safety function Safe Speed Monitor (SSM)	False
With safety function Safe Stop 1 (SS1)	True
With sft fct Safe Stop 2 (SS2)	False
With safety function Safe torque off (STO)	True
With safety function Safely Limited Position (SLP)	False
With safety function Safe Direction (SDI)	False
Protection type	Thermal protection motor Safe torque off motor Motor phase break motor Thermal protection drive Safe torque off drive Overheating drive Overcurrent between output phases and earth drive Overload of output voltage drive Short-circuit protection drive Motor phase break drive Overvoltages on the DC bus drive Line supply overvoltage drive Line supply undervoltage drive Line supply phase loss drive Overspeed drive Break on the control circuit drive
Quantity per Set	1
Width	13.03 in (331 mm)
Height	24.8 in (630 mm)
Depth	11.7 in (297 mm)
Product Weight	116.8 lb(US) (53 kg)

Environment

Insulation resistance	> 1 MOhm 500 V DC for 1 minute to earth
Noise level	56 dB 86/188/EEC
Vibration resistance	1.5 mm peak to peak (f= 2…13 Hz) conforming to IEC 60068-2-6 1 gn (f= 13…200 Hz) conforming to IEC 60068-2-6
Shock resistance	15 gn 11 ms IEC 60068-2-27
Environmental characteristic	Chemical pollution resistance class 3C3 IEC 60721-3-3 Dust pollution resistance class 3S3 IEC 60721-3-3
Relative humidity	5…95 % without condensation IEC 60068-2-3
Ambient air temperature for operation	5…122 °F (-15…50 °C) (without derating) 122…140 °F (50…60 °C) (with derating factor)

Operating altitude	<= 3280.84 ft (1000 m) without derating 1000...4800 m with current derating 1 % per 100 m
Operating position	Vertical +/- 10 degree
Product Certifications	CSA UL TÜV
Marking	CE
Standards	UL 508C IEC 61800-3 IEC 61800-5-1 IEC 61000-3-12 IEC 60721-3 IEC 61508 IEC 13849-1
Assembly style	Enclosed
Electromagnetic compatibility	Electrostatic discharge immunity test level 3 conforming to IEC 61000-4-2 Radiated radio-frequency electromagnetic field immunity test level 3 conforming to IEC 61000-4-3 Electrical fast transient/burst immunity test level 4 conforming to IEC 61000-4-4 1.2/50 µs - 8/20 µs surge immunity test level 3 conforming to IEC 61000-4-5 Conducted radio-frequency immunity test level 3 conforming to IEC 61000-4-6
Environmental class (during operation)	Class 3C3 according to IEC 60721-3-3 Class 3S3 according to IEC 60721-3-3
Maximum acceleration under shock impact (during operation)	150 m/s² at 11 ms
Maximum acceleration under vibrational stress (during operation)	10 m/s² at 13...200 Hz
Maximum deflection under vibratory load (during operation)	1.5 mm at 2...13 Hz
Permitted relative humidity (during operation)	Class 3K5 according to EN 60721-3
Volume of cooling air	107255.8 Gal/hr(US) (406 m3/h)
Overvoltage category	III
Regulation loop	Adjustable PID regulator
Noise level	56 dB
Pollution degree	2
Ambient air transport temperature	-40…158 °F (-40…70 °C)
Ambient Air Temperature for Storage	-40…158 °F (-40…70 °C)

Ordering and shipping details

Category	US1CP4E22276
Discount Schedule	CP4E
GTIN	3606481325365
Returnability	Yes
Country of origin	IN

Packing Units

Unit Type of Package 1	PCE
Nbr. of units in pkg.	1
Package 1 Height	22.835 in (58.000 cm)
Package 1 Width	17.323 in (44.000 cm)

Package 1 Length	43.701 in (111.000 cm)
Package weight(Lbs)	92.594 lb(US) (42.000 kg)

Contractual warranty

Warranty (in months)	18

Environmental Data

Schneider Electric aims to achieve Net Zero status by 2050 through supply chain partnerships, lower impact materials, and circularity via our ongoing “Use Better, Use Longer, Use Again” campaign to extend product lifetimes and recyclability.

Environmental Data explained >

How we assess product sustainability >

Environmental footprint

Total lifecycle Carbon footprint	**16 338 kg CO2 eq.**
Carbon footprint of the manufacturing phase [A1 to A3]	**397 kg CO2 eq.**
Carbon footprint of the distribution phase [A4]	**10 kg CO2 eq.**
Carbon footprint of the installation phase [A5]	**15 kg CO2 eq.**
Carbon footprint of the use phase [B2, B3, B4, B6]	**15 819 kg CO2 eq.**
Carbon footprint of the end-of-life phase [C1 to C4]	**96 kg CO2 eq.**
Environmental Disclosure	**Product Environmental Profile**

Use Better

Materials and Substances

Packaging made with recycled cardboard	**Yes**
Packaging without single use plastic	**No**
SCIP Number	**94885478-b375-4334-93be-492cfc5a4813**
EU RoHS Directive	**Compliant By Exemption**
REACh Regulation	**Reference contains Substances of Very High Concern above the threshold**
California proposition 65	**WARNING: This product can expose you to chemicals including: Lead and lead compounds, which is known to the State of California to cause cancer and birth defects or other reproductive harm. For more information go to www.P65Warnings.ca.gov**

Energy efficiency

Product contributes to saved and avoided emissions	**Yes**

Use Longer

Lifetime extension

Repair	**No**

Use Again

Repack and remanufacture

Recyclability potential, in %	**88**
Circularity Profile	**End of Life Information**
Removable battery	**Yes**

Take-back	**No**
WEEE Label	 **The product must be disposed on European Union markets following specific waste collection and never end up in rubbish bins.**

Dimensions Drawings

Dimensions

Drives without Top Cover

Front View with EMC Plate, Front, Left and Rear View without EMC Plate

mm
in.

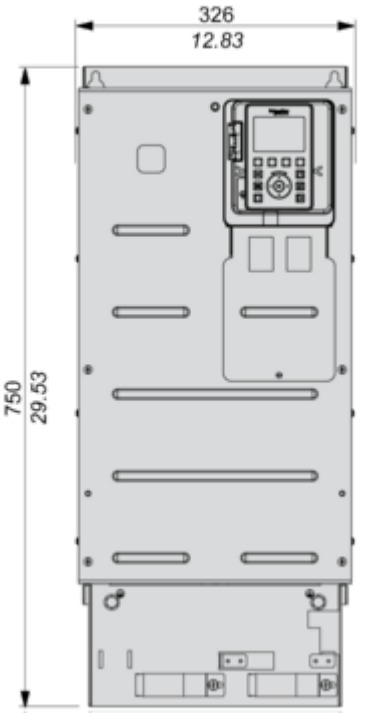

mm
in.

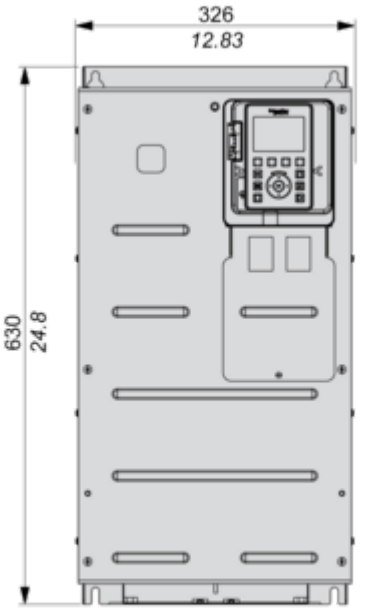

mm
in.

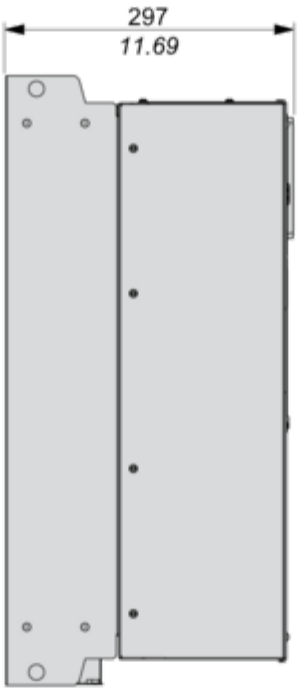

mm
in.

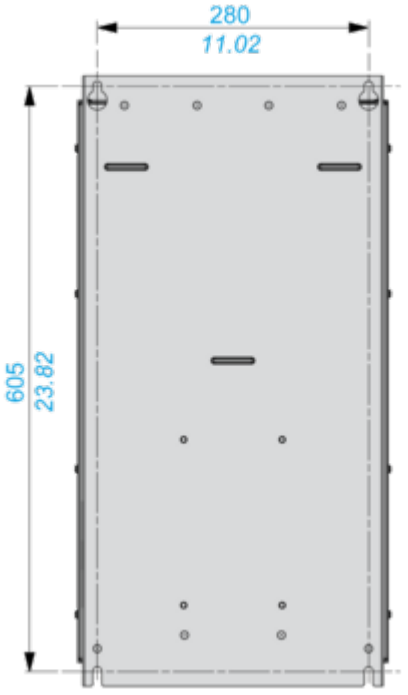

Mounting and Clearance

Clearances

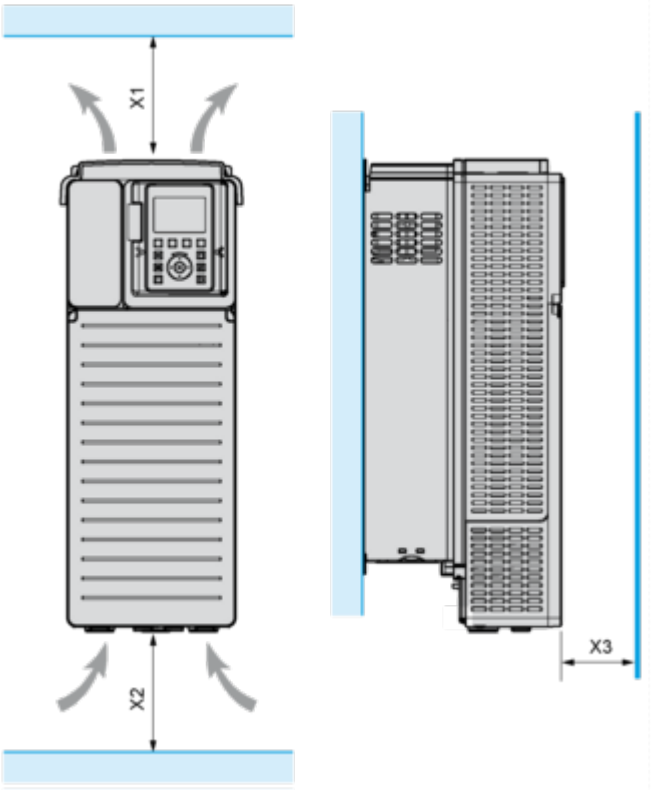

X1	X2	X3
≥ 100 mm (3.94 in.)	≥ 100 mm (3.94 in.)	≥ 10 mm (0.39 in.)

- Mount the device in a vertical position (±10°). This is required for cooling the device.
- Do not mount the device close to heat sources.
- Leave sufficient free space so that the air required for cooling purposes can circulate from the bottom to the top of the drive.

Mounting Types

Mounting Type A: Individual IP21

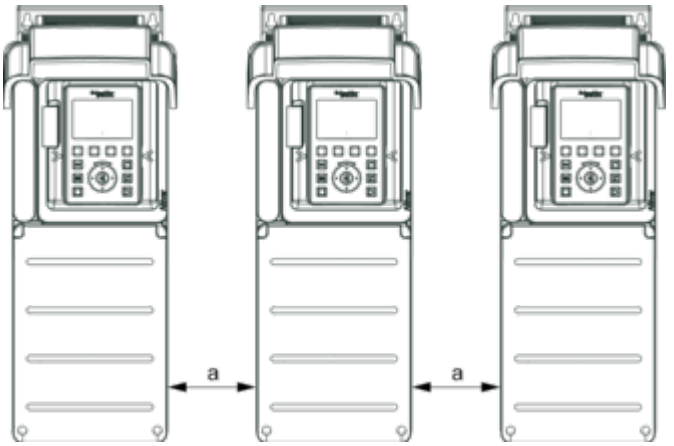

a ≥ 0

Mounting Type B: Side by Side IP20

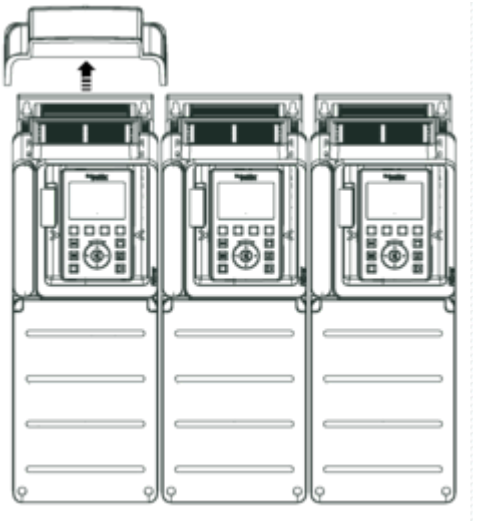

Mounting Type C: Individual IP20

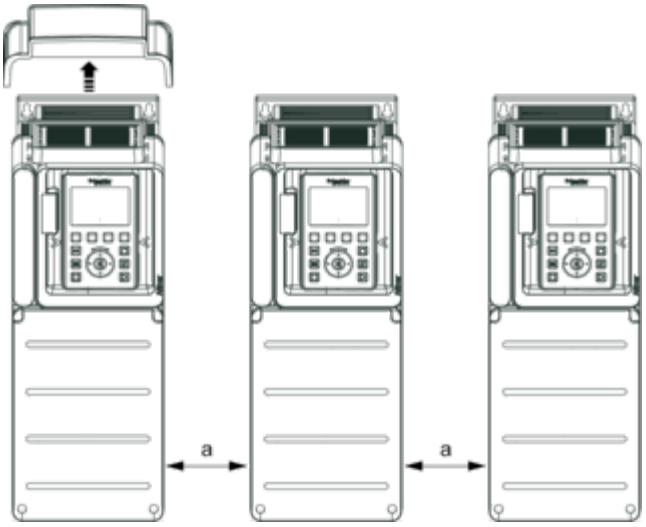

a ≥ 0

Connections and Schema

Three-Phase Power Supply with Upstream Breaking via Line Contactor

Connection diagrams conforming to standards EN 954-1 category 1 and IEC/EN 61508 capacity SIL1, stopping category 0 in accordance with standard IEC/EN 60204-1

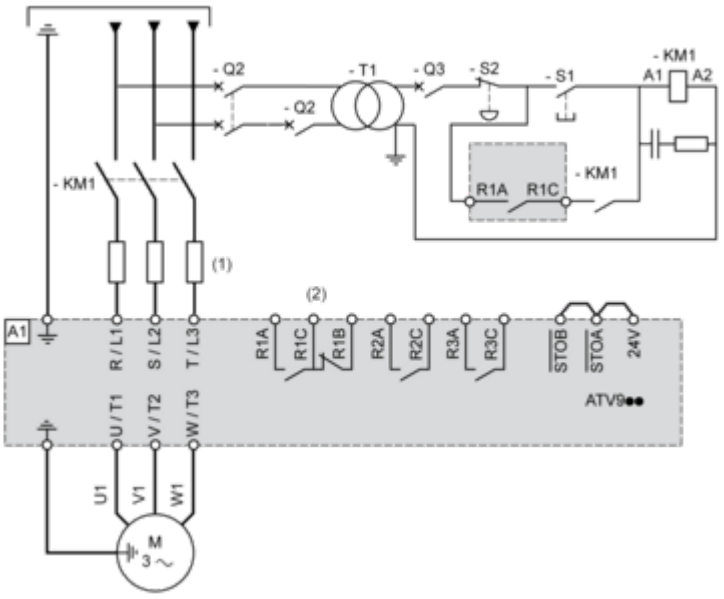

(1) Line choke if used
(2) Use relay R1 set to operating state Fault to switch Off the product once an error is detected.
A1 : Drive
KM1 : Line Contactor
Q2, Q3 : Circuit breakers
S1, S2 : Pushbuttons
T1 : Transformer for control part

Three-Phase Power Supply with Downstream Breaking via Contactor

Connection diagrams conforming to standards EN 954-1 category 1 and IEC/EN 61508 capacity SIL1, stopping category 0 in accordance with standard IEC/EN 60204-1

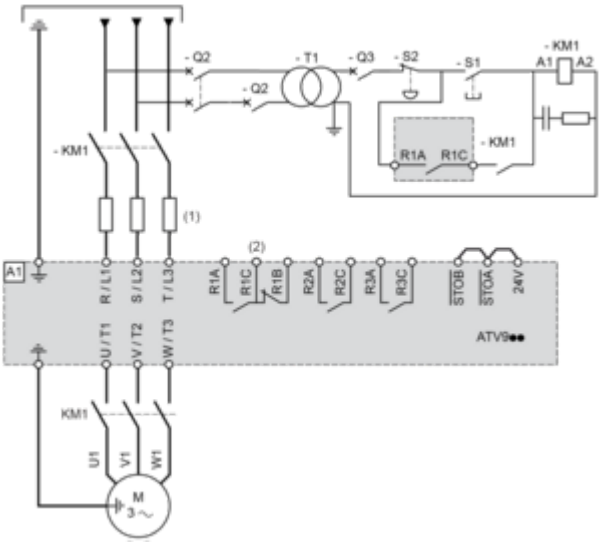

(1) Line choke if used
(2) Use relay R1 set to operating state Fault to switch Off the product once an error is detected.
A1 : Drive
KM1 : Contactor

Control Block Wiring Diagram

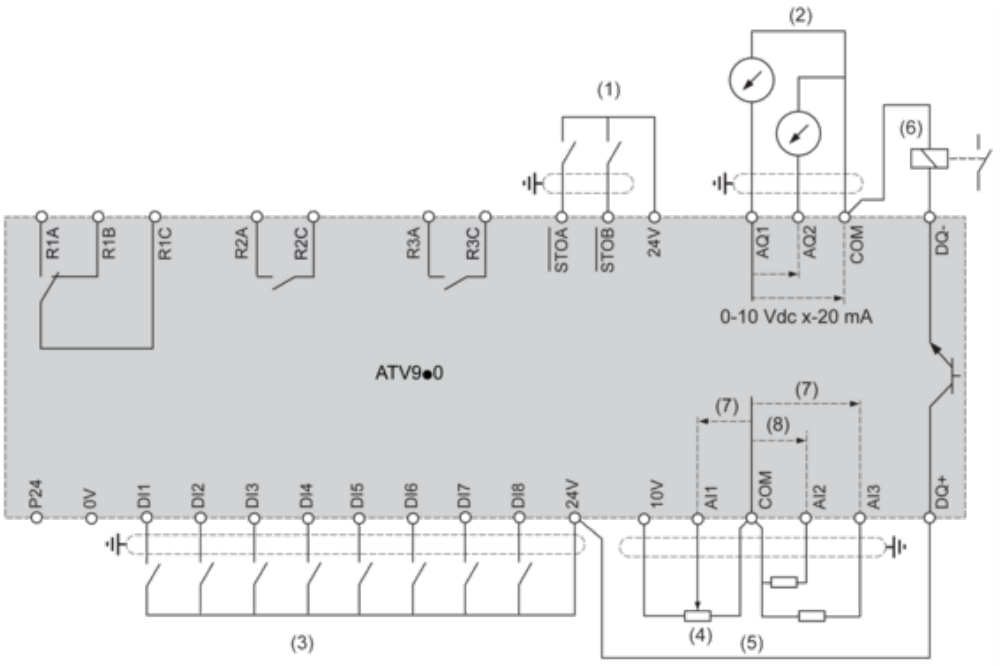

(1) Safe Torque Off
(2) Analog Output
(3) Digital Input
(4) Reference potentiometer
(5) Analog Input
(6) Digital Output
(7) 0-10 Vdc, x-20 mA
(8) 0-10 Vdc, -10 Vdc...+10 Vdc
R1A, R1B, R1C : Fault relay
R2A, R2C : Sequence relay
R3A, R3C : Sequence relay

Sensor Connection

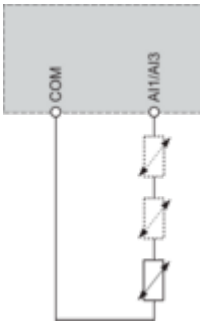

It is possible to connect either 1 or 3 sensors on terminals AI1 or AI3

Sink / Source Switch Configuration

The switch is used to adapt the operation of the logic inputs to the technology of the programmable controller outputs.

- Set the switch to Source (factory setting) if using PLC outputs with PNP transistors.
- Set the switch to Ext if using PLC outputs with NPN transistors.

Switch Set to SRC (Source) Position Using the Output Power Supply for the Digital Inputs

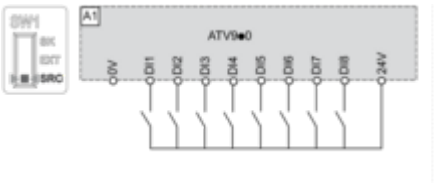

Switch Set to SRC (Source) Position and Use of an External Power Supply for the DIs

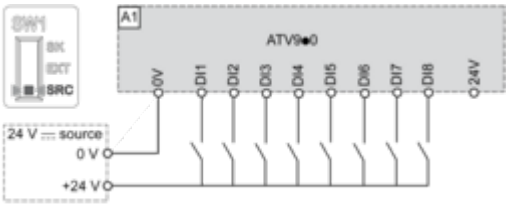

Switch Set to SK (Sink) Position Using the Output Power Supply for the Digital Inputs

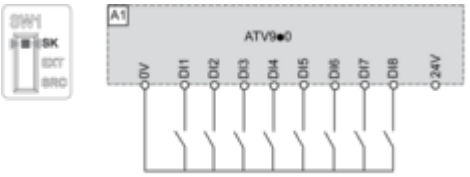

Switch Set to EXT Position Using an External Power Supply for the DIs

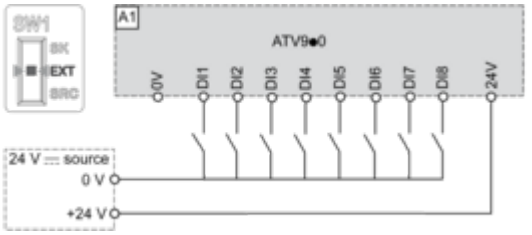

Performance Curves

Derating Curves

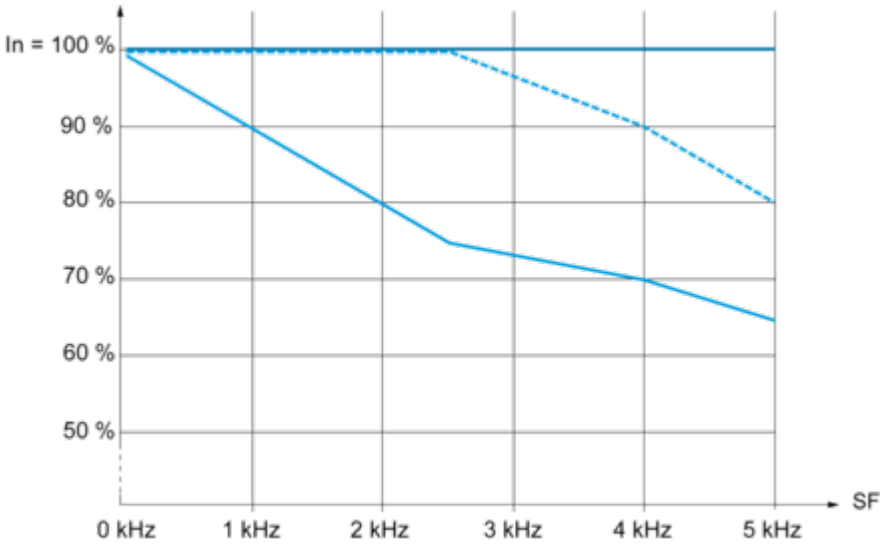

40 °C (104 °F) - Mounting type A, B and C
50 °C (122 °F) - Mounting type A, B and C
60 °C (140 °F) - Mounting type B and C
In : Nominal Drive Current
SF : Switching Frequency

Technical Illustration

Dimensions

Drives Without Top Cover, With EMC Plate



Drives Without Top Cover, Without EMC Plate

