Product data sheet

Specifications



Push-to-test pilot light, Harmony 9001K, metal, polycarbonate, fresnel lens, amber, 30mm, LED yellow, 120V

9001KT38LYA31

Product availability: Stock - Normally stocked in distribution facility

Main

Range of Product	Harmony 9001K
Product or Component Type	Push-to-test pilot light
Device short name	9001K
Type of operator	spring return
Operator profile	Amber projecting, unmarked

Complementary

Bezel material	Metal
Mounting diameter	1.2 in (30 mm)
Shape of signaling unit head	Octagonal
Light source	LED
Light source	LED
Bulb base	BA 9s
Light block supply	Direct
[Us] rated supply voltage	120 V AC/DC
[Us] rated supply voltage	120 V AC/DC
Contacts type and composition	1 C/O
Connections - terminals	Screw clamp terminals 1 x 0.22...2 x 1.5 mm² IEC 60947-1
Tightening torque	7.08 lbf.in (0.8 N.m) IEC 60947-1
shape of screw head	Cross slotted
Mechanical durability	5000000 cycles
Operating position	Any position
[Ie] rated operational current	0.55 A 125 V, DC-13, A600-Q600 NEMA
[Ui] rated insulation voltage	250 V 3)IEC 60947-1
[Uimp] rated impulse withstand voltage	2.5 kV IEC 60947-1
Contacts material	Silver alloy contacts
Contact operation	Standard
Positive opening	Without
Short-circuit protection	10 A cartridge fuse IEC 60947-5-1
[Ith] conventional free air thermal current	10 A

Price is “List Price” and may be subject to a trade discount – check with your local distributor or retailer for actual price.

Disclaimer: This documentation is not intended as a substitute for and is not to be used for determining suitability or reliability of these products for specific user applications

[Icm] rated short-circuit making capacity	12 kA 600 V AC-15, 7200 VA 15 kA 480 V AC-15, 7200 VA 30 kA 240 V AC-15, 7200 VA 60 kA 120 V AC-15, 7200 VA 0.55 kA 125 V DC-13
Rated breaking capacity	1.2 kA 600 V AC-15, 720 VA 1.5 kA 480 V AC-15, 720 VA 3 kA 240 V AC-15, 720 VA 6 kA 120 V AC-15, 720 VA 0.55 kA 125 V DC-13 0.27 kA 600 V DC-13 0.55 kA 250 V DC-13
Product Weight	0.518 lb(US) (0.235 kg)
Device presentation	Complete product
Cap/operator or lens colour	Amber
Lens type	Fresnel
[Us] rated supply voltage	120 V
Light source colour	Yellow
Lens material	Polycarbonate
Size	30 mm

Environment

Standards	IEC 60947-1 JIS C8201-5-1 JIS C 852 CSA C22.2 No 14 UL 508 IEC 60947-5-1 IEC 60947-5-4 JIS C8201-1
Product Certifications	UL 508 NEMA
Protective treatment	TC
Ambient Air Temperature for Storage	-40…158 °F (-40…70 °C)
Ambient Air Temperature for Operation	-13…158 °F (-25…70 °C)
Vibration resistance	7 gn (f= 2…500 Hz) conforming to IEC 60068-2-6
Shock resistance	50 gn IEC 60068-2-27
Electrical shock protection class	Class II conforming to IEC 61140
IP Degree of Protection	IP65/IP66
NEMA degree of protection	NEMA 1 NEMA 12 NEMA 13 NEMA 2 NEMA 3 NEMA 3R NEMA 4

Ordering and shipping details

Category	US10CS121426
Discount Schedule	0CS1
GTIN	785901761327
Returnability	Yes
Country of origin	MX

Packing Units

Unit Type of Package 1	PCE
Nbr. of units in pkg.	1
Package 1 Height	2.00 in (5.08 cm)
Package 1 Width	2.300 in (5.842 cm)
Package 1 Length	4.50 in (11.43 cm)
Package weight(Lbs)	6.400 oz (181.437 g)

Contractual warranty

Warranty (in months)	18

Environmental Data

Schneider Electric aims to achieve Net Zero status by 2050 through supply chain partnerships, lower impact materials, and circularity via our ongoing “Use Better, Use Longer, Use Again” campaign to extend product lifetimes and recyclability.

Environmental Data explained >

How we assess product sustainability >

Environmental footprint

Environmental Disclosure	Product Environmental Profile

Use Better

Materials and Substances

Packaging made with recycled cardboard	Yes
Packaging without single use plastic	Yes
SCIP Number	Ae0c4eb9-0bfb-40a4-851f-5c619fbe777d
EU RoHS Directive	Compliant By Exemption
REACh Regulation	Reference contains Substances of Very High Concern above the threshold
California proposition 65	WARNING: This product can expose you to chemicals including: Lead and lead compounds, which is known to the State of California to cause cancer and birth defects or other reproductive harm. For more information go to www.P65Warnings.ca.gov

Use Longer

Lifetime extension

Repair	No

Use Again

Repack and remanufacture

Circularity Profile	End of Life Information
Take-back	No
WEEE Label	The product must be disposed on European Union markets following specific waste collection and never end up in rubbish bins.

Dimensions Drawings

Dimensions

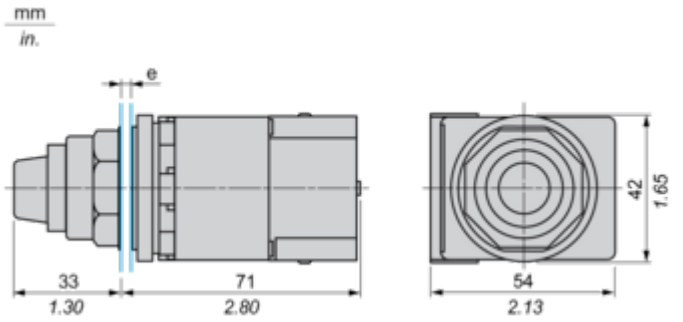

e panel thickness: 1 to 6 mm / 0.04 to 0.24 in.

Mounting and Clearance

Contact Block Mounting Position

Top and Rear views

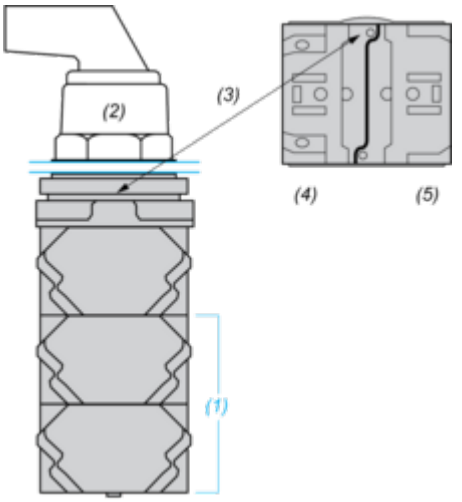

(1) It is possible to mount up to 3 levels of contacts blocks (maximum of 6 contacts blocks)
(2) Operator
(3) Locating notch
(4) Side 1
(5) Side 2

Panel Cut-Out

Clearance

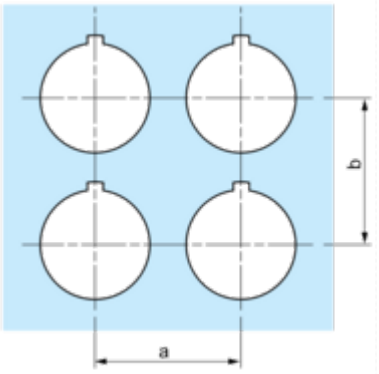

Legend plate	a min.		b min.	
	mm	in.	mm	in.
9001KN2••	57.2	2.25	44.5	1.75
9001KN3••	57.2	2.25	50.8	2.00

Individual Cut-outs Details

2 alternatives

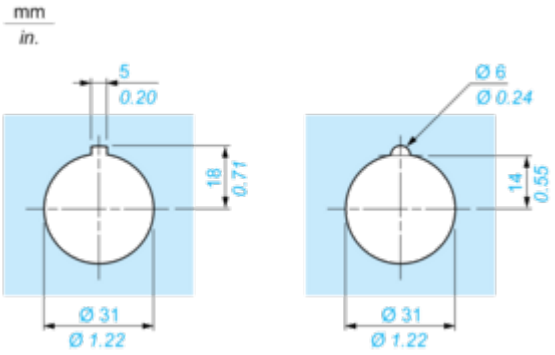

Offer Marketing Illustration

Product benefits / Features



Offer Marketing Illustration

Product benefits / Features

