Product data sheet

Specifications



To be discontinued

analog input kit, Modicon STB, standard, 4-20mA, 4 I, 15bits with sign

STBACI8320K

To be discontinued on: Dec 1, 2027

To be end-of-service on: Dec 31, 2035

Product availability: Non-Stock - Not normally stocked in distribution facility

Main

Range of Product	Modicon STB distributed I/O solution
Product or Component Type	Standard analog input kit
Kit composition	STBACI8320 module STBXBA2000 base STBXTS1100, 6-terminal screw type connector STBXTS2100, 6-terminal spring clamp connector
Product Compatibility	Power distribution module STBPDT3100/3105 Mounting base STBXBA2000
Analogue input number	4
Type of filter	Single low pass input filter 985 Hz
Analogue output number	0

Complementary

Absolute maximum input	25 mA/50 V
Cold swapping	Yes
Data format	IEC 61131-2 EN 61131-2
Update time	80 ms
Integral linearity	+/- 0.05 %FS
Differential linearity	Monotonic
Maximum supply current for sensors	25 mA per input channels
Absolute accuracy error	+/- 0.4 % of full scale 25 °C
Addressing requirement	8 input words
Supply	Power distribution module
Analogue input type	Current 0...20 mA Current 4...20 mA
Analogue input resolution	15 bits + sign
Input impedance	250 Ohm
Input protection type	Protected against short-circuit
Temperature drift	+/-0.005 %/°C
Typical current consumption	95 mA 5 V DC for logic bus

Price is “List Price” and may be subject to a trade discount – check with your local distributor or retailer for actual price.

Disclaimer: This documentation is not intended as a substitute for and is not to be used for determining suitability or reliability of these products for specific user applications

Isolation between channels and bus	1780 Vrms for 1 minute
Hot swapping fallback	Yes for standard NIMs
Local signalling	1 LED green module status (RDY) 1 LED red module error (ERR)
Height	0.7 in (18.4 mm)
Width	5.05 in (128.3 mm)
Depth	2.8 in (70 mm)
Overvoltage category	II

Environment

IP Degree of Protection	IP20
Marking	CE
Product certifications	CSA C-tick ATEX Cat 3G FM Class 1 Division 2 UL
Ambient air temperature for operation	-13…158 °F (-25…70 °C) without derating)
Ambient air temperature for storage	-40…185 °F (-40…85 °C) without derating
Relative humidity	95 % 140 °F (60 °C) without condensation
Operating altitude	6561.68 ft (2000 m)
Pollution degree	2
Vibration resistance	+/-0.35 mm 10…58 Hz) 3 gn 58…150 Hz) on 35 mm DIN rail 5 gn 58…150 Hz) on 35 mm DIN rail
Shock resistance	30 gn 11 msIEC 88 reference 2-27

Ordering and shipping details

Category	US1PC3218215
Discount Schedule	PC32
GTIN	3595863948745
Returnability	No
Country of origin	ID

Packing Units

Unit Type of Package 1	PCE
Nbr. of units in pkg.	1
Package 1 Height	1.2 in (3.0 cm)
Package 1 Width	3.1 in (8.0 cm)
Package 1 Length	5.1 in (13.0 cm)
Package weight(Lbs)	5.1 oz (146.0 g)
Unit Type of Package 2	S02
Number of Units in Package 2	28
Package 2 Height	5.9 in (15.0 cm)

Package 2 Width	11.8 in (30.0 cm)
Package 2 Length	15.7 in (40.0 cm)
Package 2 Weight	10.139 lb(US) (4.599 kg)
Unit Type of Package 3	PAL
Number of Units in Package 3	448
Package 3 Height	23.6 in (60.0 cm)
Package 3 Width	31.5 in (80.0 cm)
Package 3 Length	176.4 in (448.0 cm)
Package 3 Weight	144.200 lb(US) (65.408 kg)

Contractual warranty

Warranty (in months)	18

Environmental Data

Schneider Electric aims to achieve Net Zero status by 2050 through supply chain partnerships, lower impact materials, and circularity via our ongoing “Use Better, Use Longer, Use Again” campaign to extend product lifetimes and recyclability.

Environmental Data explained >

How we assess product sustainability >

Use Better

Materials and Substances

Packaging made with recycled cardboard	**No**
Packaging without single use plastic	**No**
SCIP Number	**6830dd70-e4bc-47df-85c7-e41f888576f4**
EU RoHS Directive	**Compliant By Exemption**
REACh Regulation	**Reference contains Substances of Very High Concern above the threshold**
California proposition 65	**WARNING: This product can expose you to chemicals including: Lead and lead compounds, which is known to the State of California to cause cancer and birth defects or other reproductive harm. For more information go to www.P65Warnings.ca.gov**

Use Longer

Lifetime extension

Repair	**No**

Use Again

Repack and remanufacture

Take-back	**No**

Dimensions Drawings

Dimensions

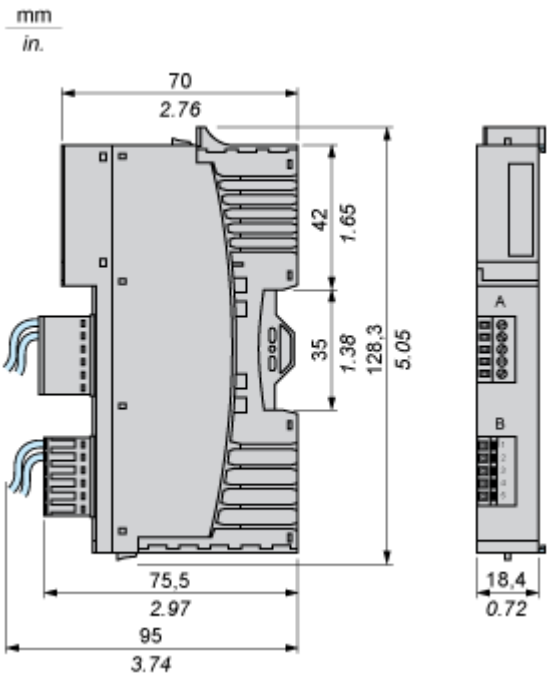

Connections and Schema

Wiring Diagram

Example

4 isolated analog sensors, external 24 VDC power supply

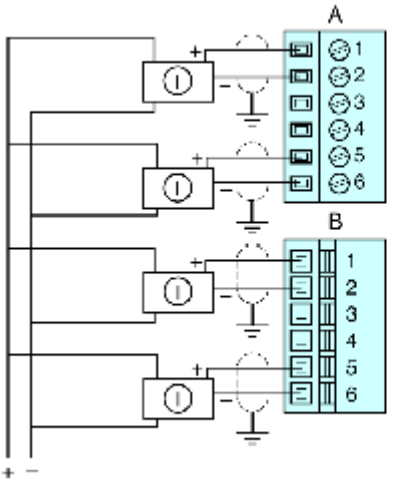

Pin	Top Connections	Bottom Connections
1	current in 1 +	current in 3 +
2	current in 1 -	current in 3 -
3	no connection	no connection
4	no connection	no connection
5	current in 2 +	current in 4 +
6	current in 2 -	current in 4 -