Product data sheet

Specifications



Discrete I/O expansion block, Modicon TM7, IP67, 8 DI, 24 V DC, M8 connector

TM7BDI8B

Product availability: Non-Stock - Not normally stocked in distribution facility

Main

Range of Product	Modicon TM7
Product or Component Type	Discrete I/O expansion block
Range Compatibility	Modicon LMC058 Modicon M258
Enclosure Material	Plastic
Bus type	TM7 bus
Discrete input number	8
Discrete input voltage	24 V DC
Discrete input logic	Positive

Complementary

Discrete input compatibility	8 at 24 V DC
Discrete input current	7 mA at 24 V DC
Input protection type	Protected against short-circuit Reverse polarity protection
Electrical connection	1 male connector M12 - B coding - 4 ways bus IN 1 female connector M12 - B coding - 4 ways bus OUT 1 male connector M8 - 4 ways power IN 1 female connector M8 - 4 ways power OUT 8 female connectors M8 - 3 ways sensor
Operating position	Any position
Fixing Mode	By 2 screws
Local signalling	2 LEDs for bus diagnostic 2 LEDs for sensor power supply diagnostics
Height	3.9 in (99 mm)
Width	0.5 in (12.5 mm)
Depth	3.0 in (75 mm)
Product Weight	0.40 lb(US) (0.18 kg)

Environment

Disclaimer: This documentation is not intended as a substitute for and is not to be used for determining suitability or reliability of these products for specific user applications

Price is “List Price” and may be subject to a trade discount – check with your local distributor or retailer for actual price.

Electromagnetic compatibility	Electrostatic discharge immunity test, 4 kV on contact IEC 61000-4-2 Electrostatic discharge immunity test, 8 kV in air IEC 61000-4-2 Susceptibility to electromagnetic fields, 1 V/m 2...2.7 GHz IEC 61000-4-3 Susceptibility to electromagnetic fields, 10 V/m 80...2000 MHz IEC 61000-4-3 Electrical fast transient/burst immunity test, 2 kV power supply IEC 61000-4-4 Electrical fast transient/burst immunity test, 1 kV input/output IEC 61000-4-4 Electrical fast transient/burst immunity test, 1 kV shielded cable IEC 61000-4-4 1.2/50 µs shock waves immunity test, 0.5 kV power supply (common mode) IEC 61000-4-5 1.2/50 µs shock waves immunity test, 1 kV power supply (differential mode) IEC 61000-4-5 1.2/50 µs shock waves immunity test, 0.5 kV unshielded links (common mode) IEC 61000-4-5 1.2/50 µs shock waves immunity test, 1 kV unshielded links (differential mode) IEC 61000-4-5 1.2/50 µs shock waves immunity test, 0.5 kV shielded links (common mode) IEC 61000-4-5 1.2/50 µs shock waves immunity test, 1 kV shielded links (differential mode) IEC 61000-4-5 Conducted RF disturbances IEC 61000-4-6 Conducted and radiated emissions CISPR 11
IP Degree of Protection	IP67
Marking	CE
Product certifications	C-tick ATEX II 3g EEx nA II T5 CURus GOST-R
Standards	IEC 61131-2
Ambient air temperature for operation	14…140 °F (-10…60 °C)
Ambient air temperature for storage	-13…185 °F (-25…85 °C)
Relative humidity	5…95 % without condensation or dripping water
Operating altitude	0...6561.68 ft (0...2000 m)
Pollution degree	2
Vibration resistance	7.5 mm 2…8 Hz) IEC 60721-3-5 Class 5M3 2 gn 8…200 Hz) IEC 60721-3-5 Class 5M3 4 gn 200…500 Hz) IEC 60721-3-5 Class 5M3
Shock resistance	30 gn 11 msIEC 60721-3-5 Class 5M3

Ordering and shipping details

Category	US1PC1222532
Discount Schedule	PC12
GTIN	3595864093048
Returnability	No
Country of origin	AT

Packing Units

Unit Type of Package 1	PCE
Nbr. of units in pkg.	1
Package 1 Height	1.969 in (5.000 cm)
Package 1 Width	2.323 in (5.900 cm)
Package 1 Length	4.173 in (10.600 cm)
Package weight(Lbs)	7.055 oz (200.000 g)
Unit Type of Package 2	S02

Number of Units in Package 2	24
Package 2 Height	5.906 in (15.000 cm)
Package 2 Width	11.811 in (30.000 cm)
Package 2 Length	15.748 in (40.000 cm)
Package 2 Weight	11.129 lb(US) (5.048 kg)

Contractual warranty

Warranty (in months)	18

Environmental Data

Schneider Electric aims to achieve Net Zero status by 2050 through supply chain partnerships, lower impact materials, and circularity via our ongoing “Use Better, Use Longer, Use Again” campaign to extend product lifetimes and recyclability.

Environmental Data explained >

How we assess product sustainability >

Environmental footprint

Total lifecycle Carbon footprint	**51 kg CO2 eq.**
Carbon footprint of the manufacturing phase [A1 to A3]	**11 kg CO2 eq.**
Carbon footprint of the distribution phase [A4]	**0 kg CO2 eq.**
Carbon footprint of the installation phase [A5]	**0 kg CO2 eq.**
Carbon footprint of the use phase [B2, B3, B4, B6]	**40 kg CO2 eq.**
Carbon footprint of the end-of-life phase [C1 to C4]	**0.3 kg CO2 eq.**

Use Better

Materials and Substances

Packaging made with recycled cardboard	**No**
Packaging without single use plastic	**Yes**
EU RoHS Directive	**Compliant**
REACh Regulation	**Free of Substances of Very High Concern above the threshold**
California proposition 65	**WARNING: This product can expose you to chemicals including: Lead and lead compounds, which is known to the State of California to cause cancer and birth defects or other reproductive harm. For more information go to www.P65Warnings.ca.gov**
PVC free	**Yes**

Use Longer

Lifetime extension

Repair	**No**

Use Again

Repack and remanufacture

Recyclability potential, in %	**10**
Circularity Profile	**End of Life Information**
Take-back	**No**
WEEE Label	**The product must be disposed on European Union markets following specific waste collection and never end up in rubbish bins.**

Presentation

Digital Input Block

Description

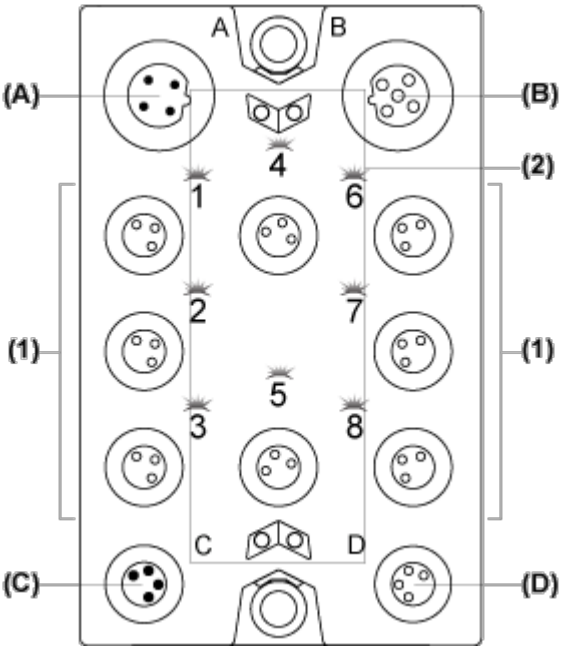

(A) TM7 bus IN connector

(B) TM7 bus OUT connector

(C) 24 Vdc power IN connector

(D) 24 Vdc power OUT connector

(1) Input connectors

(2) Status LEDs

Connector and Channel Assignments

Input connectors	Channel type	Channels
1	Input	I0
2	Input	I1
3	Input	I2
4	Input	I3
5	Input	I4
6	Input	I5
7	Input	I6
8	Input	I7

Dimensions Drawings

TM7 Block, Size 1

Dimensions

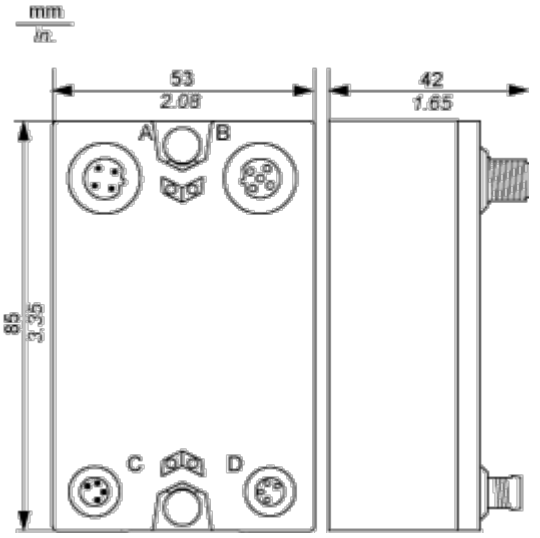

Mounting and Clearance

Spacing Requirements

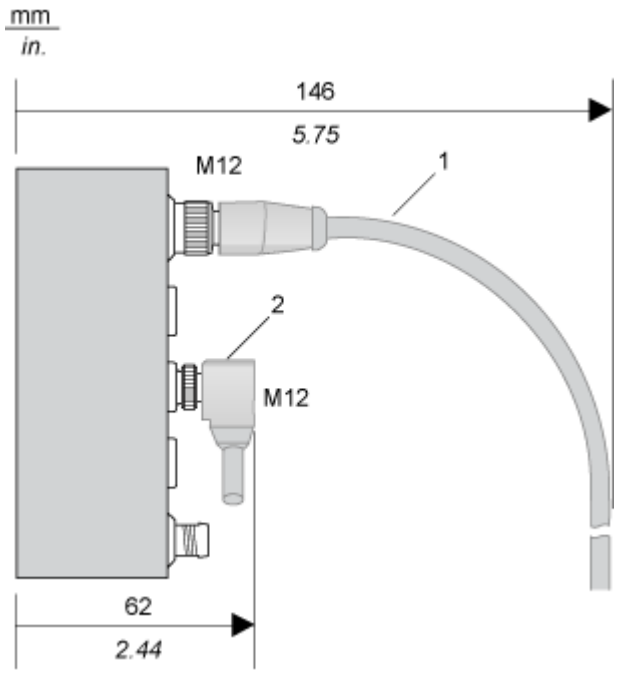

1 Straight cable

2 Elbowed cable

Installation Guidelines

TM7 Block on an Aluminium Frame

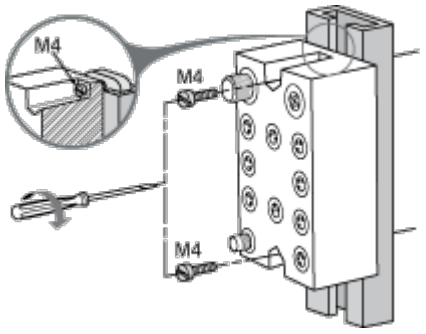

NOTE: Maximum torque to fasten the required M4 screws is 0.6 N.m (5.3 lbf-in).

TM7 Block on a DIN Rail

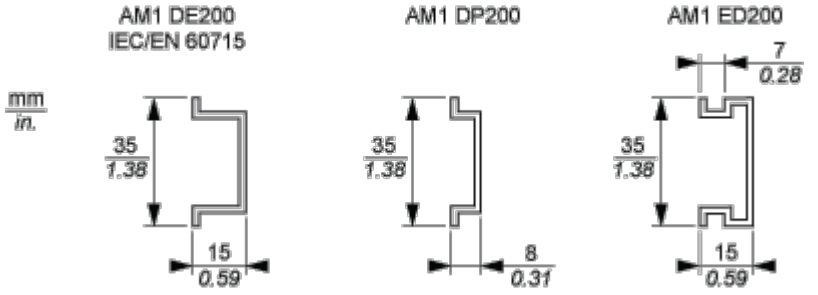

NOTE: Only size 1 (smallest) blocks can be installed on DIN rail with the TM7ACMP mounting plate.

TM7 Block Directly on the Machine

Drilling template of the block:

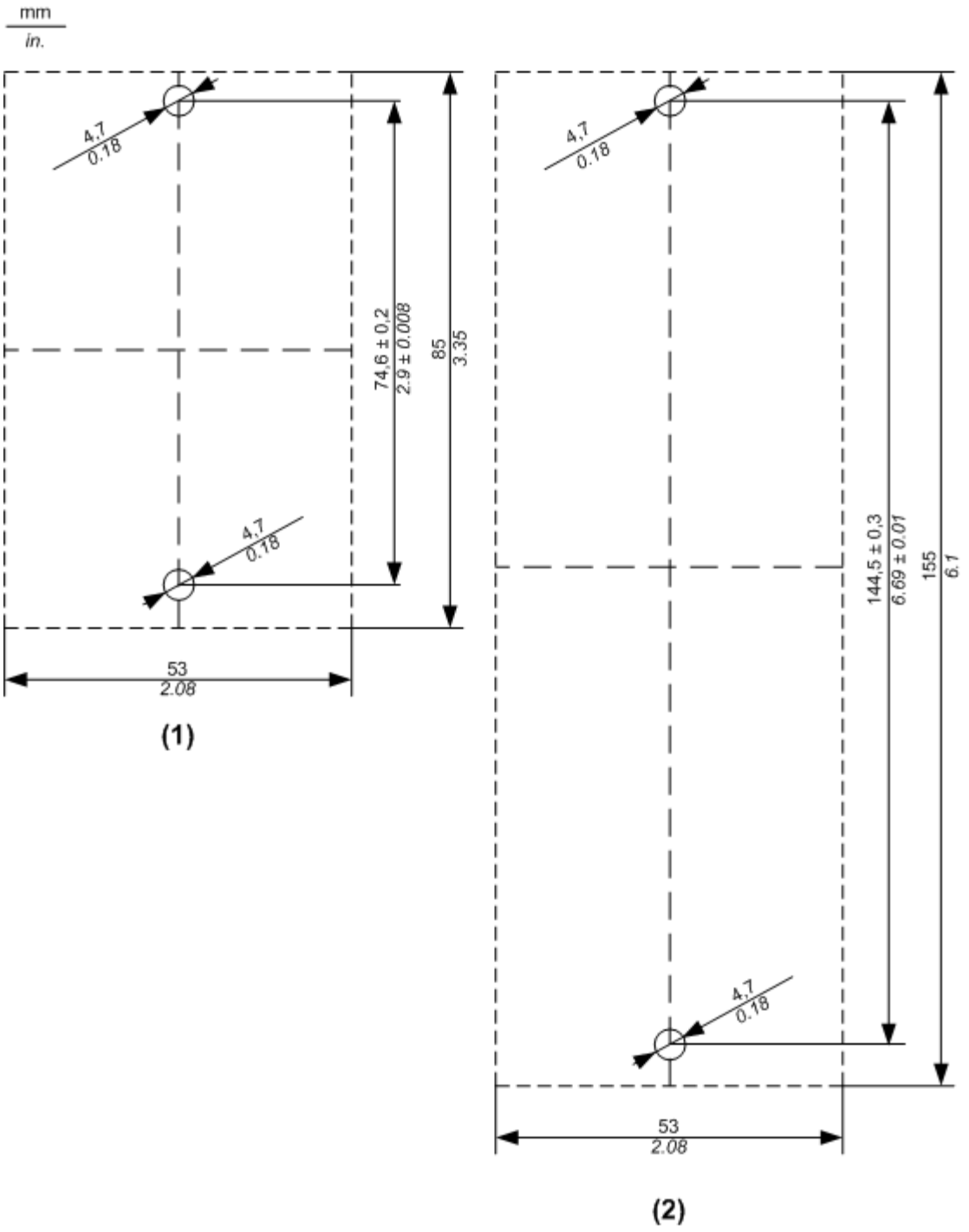

(1) Size 1

(2) Size 2

The thickness of the base plate should be taken into consideration when defining the screw length.

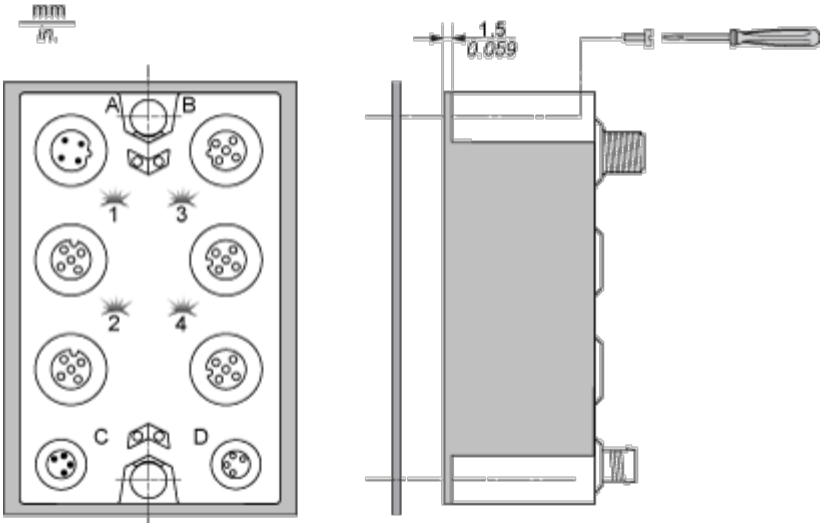

NOTE: Maximum torque to fasten the required M4 screws is 0.6 N.m (5.3 lbf-in).

Connections and Schema

Wiring Diagram

Pin Assignments for Input Connectors

Connection	Pin	M8 Input
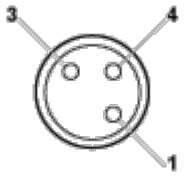	1	24 Vdc sensor supply
	3	0 Vdc
	4	DI: input signal

Wiring the Power Supply

When you provide power to a TM7 I/O block using the 24 VDC Power OUT connector of the preceding I/O block, both blocks occupy the same 24 Vdc I/O power segment. However, if you connect an external isolated power supply to the 24 Vdc Power IN connector of a TM7 I/O block, you establish a new 24 Vdc I/O power segment beginning with that I/O block.

I/O block wired with one external 24 Vdc power supply:

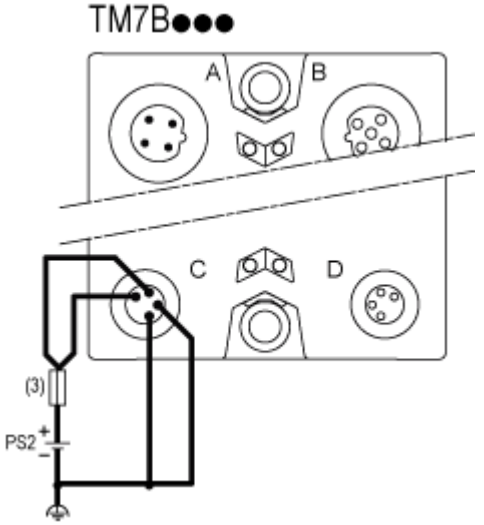

(3) External fuse, Type T slow-blow, 8 A max., 250 V

PS2 External isolated I/O power supply, 24 Vdc