Product data sheet

Specifications



Push-button head, Harmony 9001SK, plastic, recessed, 7 colours choice, 30mm, spring return

9001SKR2U

Product availability: Non-Stock - Not normally stocked in distribution facility

Main

Range of Product	Harmony 9001SK
Product or Component Type	Head for push-button
Device short name	9001SK
Operator profile	recessed, unmarked
Operator additional information	Plastic guard

Complementary

Mounting diameter	1.2 in (30 mm)
Shape of signaling unit head	Round
Type of operator	spring return
Product Weight	0.11 lb(US) (0.05 kg)
Bezel material	Plastic
Cap/operator or lens colour	7 colours choice
Operator profile	Recessed
Type of operator	Spring return
Contacts type and composition	Without contact block

Environment

IP Degree of Protection	IP65/IP66

Ordering and shipping details

Category	US10CS121429
Discount Schedule	0CS1
GTIN	785901524380
Returnability	No
Country of origin	MX

Packing Units

Unit Type of Package 1	PCE
Nbr. of units in pkg.	1
Package 1 Height	2.008 in (5.1 cm)
Package 1 Width	2.3 in (5.9 cm)

Price is “List Price” and may be subject to a trade discount – check with your local distributor or retailer for actual price.

Disclaimer: This documentation is not intended as a substitute for and is not to be used for determining suitability or reliability of these products for specific user applications

Package 1 Length	2.9 in (7.4 cm)
Package weight(Lbs)	1.8 oz (50 g)
Unit Type of Package 2	S01
Number of Units in Package 2	12
Package 2 Height	5.9 in (15 cm)
Package 2 Width	5.9 in (15 cm)
Package 2 Length	15.7 in (40 cm)
Package 2 Weight	13.521 lb(US) (6.133 kg)

Contractual warranty

Warranty (in months)	18

Environmental Data

Schneider Electric aims to achieve Net Zero status by 2050 through supply chain partnerships, lower impact materials, and circularity via our ongoing “Use Better, Use Longer, Use Again” campaign to extend product lifetimes and recyclability.

Environmental Data explained >

How we assess product sustainability >

Environmental footprint

Environmental Disclosure	Product Environmental Profile

Use Better

Materials and Substances

Packaging made with recycled cardboard	Yes
Packaging without single use plastic	Yes
EU RoHS Directive	Compliant
REACh Regulation	Reference contains Substances of Very High Concern above the threshold
California proposition 65	WARNING: This product can expose you to chemicals including: Lead and lead compounds, which is known to the State of California to cause cancer and birth defects or other reproductive harm. For more information go to www.P65Warnings.ca.gov

Use Longer

Lifetime extension

Repair	No

Use Again

Repack and remanufacture

Circularity Profile	End of Life Information
Take-back	No
WEEE Label	The product must be disposed on European Union markets following specific waste collection and never end up in rubbish bins.

Dimensions Drawings

Dimensions

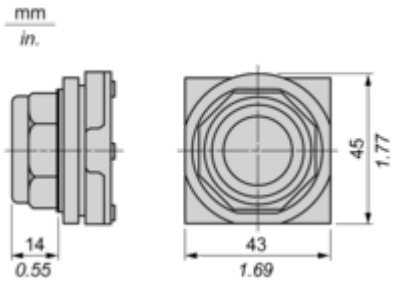

Mounting and Clearance

Contact Block Mounting Position

Top and Rear views

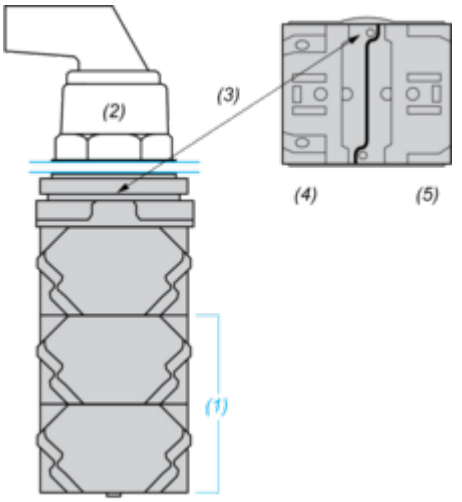

(1) It is possible to mount up to 3 levels of contacts blocks (maximum of 6 contacts blocks)
(2) Operator
(3) Locating notch
(4) Side 1
(5) Side 2

Image of product / Alternate images

Alternative







