Product data sheet

Specifications



flat screen, Harmony GTU, 12.1inch wide display, smart WLAN

HMIDT643

To be discontinued

Discontinued on: Jun 30, 2025

To be end-of-service on: Jun 30, 2030

Product availability: Stock - Normally stocked in distribution facility

Main

Range of Product	Harmony GTU
Terminal type	Touchscreen display
Product or Component Type	Flat screen
[Us] rated supply voltage	12...24 V DC power supply
Supply voltage limits	10.8…28.8 V
Power Consumption in W	23 W
Inrush current	30 A

Complementary

Integrated connection type	USB 2.0 type A USB 2.0 type mini B
Communication port protocol	WLAN 2.4 GHz
Bandwidth	20 MHz
Operating Mode	Infrastructure
Transmission rate	<= 11 Mbit/s IEEE 802.11b <= 54 Mbit/s IEEE 802.11g <= 72.2 Mbit/s IEEE 802.11n
Maximum sensing distance	98.4 ft (30 m) depending on surrounding environment
Touchscreen resolution	1024 x 1024
Display size	12.1 inch
Aspect ratio	4:3
Display type	Colour TFT LCD
Display Resolution	1024 x 768 pixels XGA
Display colour	16 million colours
Backlight lifespan	50000 hours
Touch panel	Multi touch analogue resistive
Method of access	Client mode 1…11, North America Client mode 1…13, Japan Client mode 1…13, Europe Client mode 1…13, Korea Client mode 1…13, China Client mode 1…11, Taiwan Access point mode 1…11

Price is “List Price” and may be subject to a trade discount – check with your local distributor or retailer for actual price.

Disclaimer: This documentation is not intended as a substitute for and is not to be used for determining suitability or reliability of these products for specific user applications

Encryption Protocol	WEP 128 AES (Advanced Encryption Standard) TKIP
Type of License	10 clients
Function Available	Brightness sensor
Type of cooling	Natural convection
Type of Installation	Indoor installation
Cut-out dimensions	301.5 (+ 1/- 0) x 227.5 (+ 1/- 0) mm
Width	12.4 in (315 mm)
Height	9.5 in (241 mm)
Depth	2.6 in (67 mm)
Product Weight	2.0 lb(US) (0.9 kg)

Environment

IP degree of protection	Front panel IP66 Front panel IP67
NEMA degree of protection	NEMA 4X front panel
Standards	UL 508 ANSI/ISA 12-12-01 Class I division 2 CSA C22.2 No 213 CSA C22.2 No 142 IEC 61132-2
Product certifications	CE CULus KC RCM UKCA UKEX
Ambient air temperature for operation	32…140 °F (0…60 °C) IEC 61131-2
Ambient air temperature for storage	-4…140 °F (-20…60 °C)
Relative Humidity	10…90 % non-condensing
Operating altitude	6561.68 ft (2000 m)
Vibration resistance	3.5 mm constant amplitude 5…9 Hz) IEC 61131-2 9.8 m/s² 9…150 Hz) IEC 61131-2
Shock resistance	147 m/s²IEC 61131-2
Electromagnetic compatibility	Electrostatic discharge immunity test level 3 conforming to IEC 61000-4-2

Ordering and shipping details

Category	US10MC222567
Discount Schedule	0MC2
GTIN	3606480687235
Returnability	Yes
Country of origin	ID

Packing Units

Unit Type of Package 1	PCE
Nbr. of units in pkg.	1
Package 1 Height	7.677 in (19.500 cm)

Package 1 Width	13.189 in (33.500 cm)
Package 1 Length	17.126 in (43.500 cm)
Package weight(Lbs)	10.229 lb(US) (4.640 kg)
Unit Type of Package 2	BB1
Number of Units in Package 2	2
Package 2 Height	13.976 in (35.500 cm)
Package 2 Width	16.535 in (42.000 cm)
Package 2 Length	18.110 in (46.000 cm)
Package 2 Weight	22.641 lb(US) (10.270 kg)
Unit Type of Package 3	P12
Number of Units in Package 3	20
Package 3 Height	55.118 in (140.000 cm)
Package 3 Width	31.496 in (80.000 cm)
Package 3 Length	47.244 in (120.000 cm)
Package 3 Weight	238.099 lb(US) (108.000 kg)

Contractual warranty

Warranty (in months)	18

Environmental Data

Schneider Electric aims to achieve Net Zero status by 2050 through supply chain partnerships, lower impact materials, and circularity via our ongoing “Use Better, Use Longer, Use Again” campaign to extend product lifetimes and recyclability.

Environmental Data explained >

How we assess product sustainability >

Environmental footprint

Total lifecycle Carbon footprint	**1 119 kg CO2 eq.**
Carbon footprint of the manufacturing phase [A1 to A3]	**171 kg CO2 eq.**
Carbon footprint of the distribution phase [A4]	**0.4 kg CO2 eq.**
Carbon footprint of the installation phase [A5]	**0.7 kg CO2 eq.**
Carbon footprint of the use phase [B2, B3, B4, B6]	**944 kg CO2 eq.**
Carbon footprint of the end-of-life phase [C1 to C4]	**3 kg CO2 eq.**
Environmental Disclosure	Product Environmental Profile

Use Better

Materials and Substances

F-gas usage performance	**Only air and vacuum used for insulation / breaking, no F-gas including SF6**
Packaging made with recycled cardboard	**Yes**
Packaging without single use plastic	**No**
SCIP Number	**F7bde1f0-e6bc-4b91-91d2-88584de513eb**
EU RoHS Directive	Compliant By Exemption
REACh Regulation	Reference contains Substances of Very High Concern above the threshold
California proposition 65	**WARNING: This product can expose you to chemicals including: Lead and lead compounds, which is known to the State of California to cause cancer and birth defects or other reproductive harm. For more information go to www.P65Warnings.ca.gov**
Halogen content performance	**Product contains halogen above thresholds**
PVC free	**No**
Silicon free	**No**

Use Longer

Lifetime extension

Repair	**No**

Use Again

Repack and remanufacture

Recyclability potential, in %	**55**

Circularity Profile	End of Life Information
Take-back	No
WEEE Label	The product must be disposed on European Union markets following specific waste collection and never end up in rubbish bins.

Dimensions Drawings

External Dimensions

Display Unit with Box Module

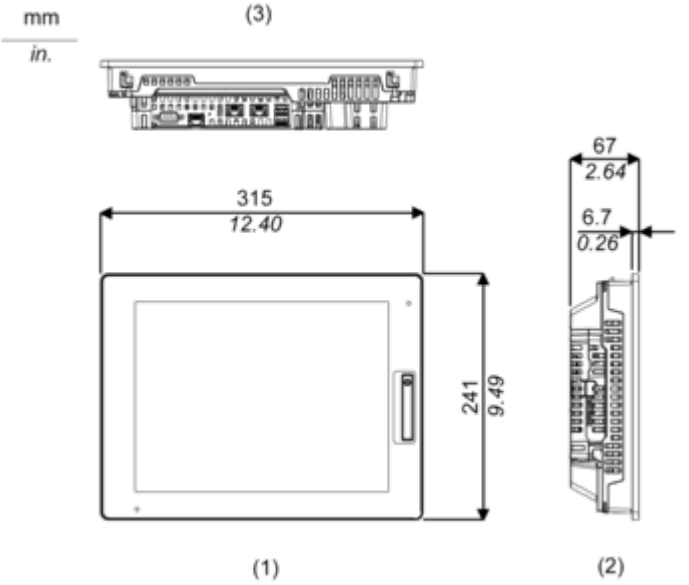

1 Front
2 Left
3 Bottom

Installation with Installation Fasteners and Dimensions with Cables

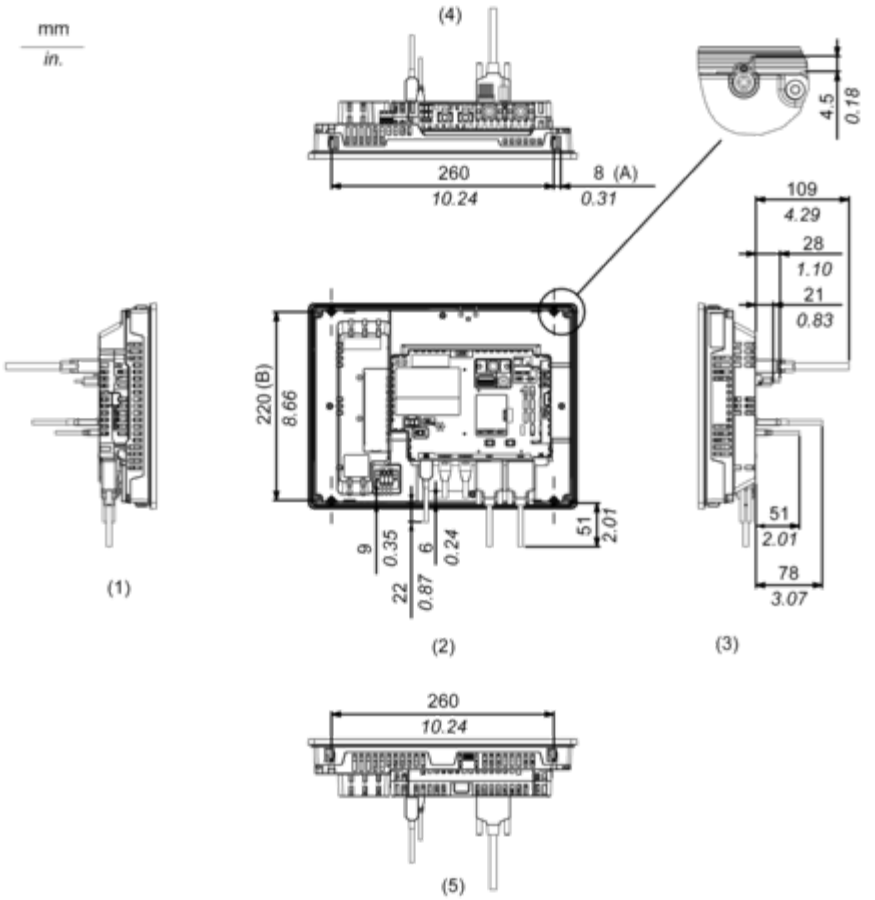

(A) Rotation area of the fastener
(B) Pitch of the center of installation fastner screws
1 Right
2 Front
3 Left
4 Bottom
5 Top

Mounting and Clearance

Mounting

Panel Cut Dimensions

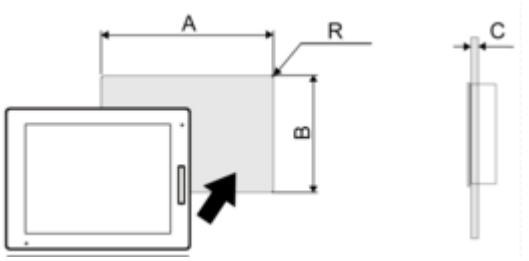

Dimensions in mm

A	B	C	R
301.5 (+1/-0)	227.5 (+1/-0)	1.6...5	3 max.

Dimensions in in.

A	B	C	R
11.87 (+0.04/-0)	8.96 (+0.04/-0)	0.06...0.2	0.12 max.

Installation Requirements

Mounting Angle

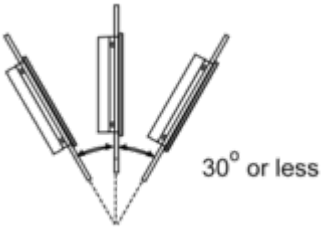

When installing this product in a slanted position with an incline more than 30°, the ambient temperature must not exceed 40 °C (104 °F). You may need to use forced air cooling (fan, A/C) to ensure the ambient operating temperature is 40 °C or less (104 °F or less).

Clearance

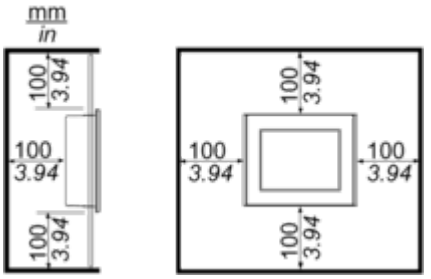

Image of product / Alternate images

Alternative

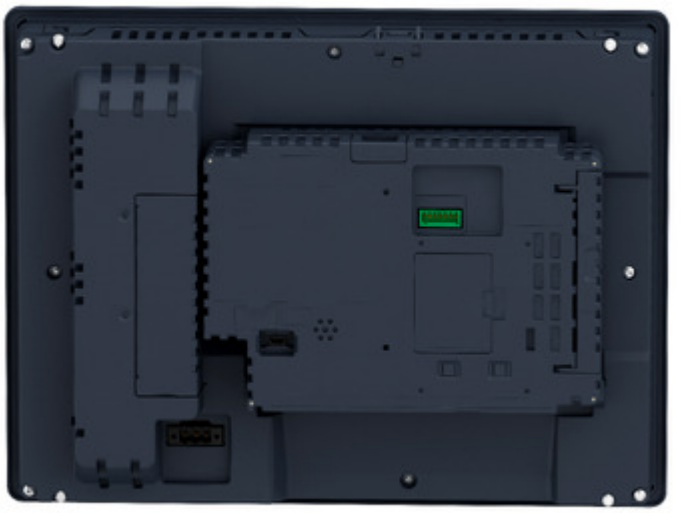




Schneider
Electric

