Product data sheet

Specifications

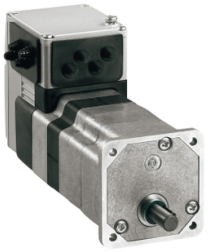

brushless DC motor, Lexium ILA ILE ILS, 24..36 V, CANopen DS301 interface, L = 174mm, 24:1

ILE1F661PB1A5

Product availability: Non-Stock - Not normally stocked in distribution facility

Main

Range of Product	Lexium integrated drive
Product or Component Type	Motion integrated drive
Device short name	ILE
Motor Type	Brushless DC motor
Number of motor poles	6
Phase	Single phase
[Us] rated supply voltage	36 V 24 V
Network type	DC
Communication interface	CANopen DS301, Integrated
Length	9.02 in (229 mm)
Winding type	Medium speed of rotation and medium torque
Electrical Connection	Printed circuit board connector
Holding brake	Without
Gear box type	Worm gear, 2 stages
Reduction ratio	24:1 (525:22)
Nominal speed	168 rpm 24 V 168 rpm 36 V
Nominal torque	22.1 lbf.in (2.5 N.m) 24 V 31.0 lbf.in (3.5 N.m) 36 V

Complementary

Transmission Rate	50, 100, 125, 250, 500, 800 and 1000 kbauds
Mounting Support	Flange
Motor flange size	2.6 in (66 mm)
Number of motor stacks	1
Centring collar diameter	1.4 in (36 mm)
Number of mounting holes	2
Mounting holes diameter	0.2 in (4.4 mm)
Feedback type	BLDC encoder
Shaft end	Hole
Second shaft	Without second shaft end
Supply voltage limits	18…40 V

Price is “List Price” and may be subject to a trade discount – check with your local distributor or retailer for actual price.

Disclaimer: This documentation is not intended as a substitute for and is not to be used for determining suitability or reliability of these products for specific user applications

Current consumption	7000 mA peak 5500 mA maximum continuous
Associated fuse rating	10 A
Input/output type	4 signals (each be used as input or output)
Voltage state 0 guaranteed	-3...4.5 V
Voltage state 1 guaranteed	15...30 V
Discrete input current	10 mA at 24 V on/STO_A safety input 3 mA at 24 V on/STO_B safety input 2 mA at 24 V 24 V signal interface
Discrete output voltage	23...25 V
Maximum switching current	100 mA per output 200 mA total
Protection Type	Safe torque off Short circuit of the output voltage Overload of output voltage
Maximum supply current	5.1 A 36 V 0.1 A power stage disabled) 6.8 A 24 V
Nominal output power	45 W 24 V 61 W 36 V
Peak stall torque	33.10 lbf.in (3.74 N.m) 24 V 45.85 lbf.in (5.18 N.m) 36 V
Continuous stall torque	37.2 lbf.in (4.2 N.m)
Detent torque	25.7 lbf.in (2.9 N.m)
Speed feedback resolution	12 points/turn motor 1.26° gearbox output
Accuracy error	+/- 1 point
Maximum torsional backlash	1.5 °
Rotor inertia	90 kg.cm²
Maximum mechanical speed	186 rpm
Maximum radial force Fr	200 N
Maximum axial force Fa	80 N
Service life in hours	3000 h bearing
Marking	CE
Type of cooling	Natural convection
Product Weight	5.07 lb(US) (2.3 kg)

Environment

Standards	EN 50347 IEC 60072-1 IEC 61800-3, Ed 2 EN/IEC 61800-3 EN 61800-3:2001, second environment EN 61800-3 : 2001-02 EN/IEC 50178
Product Certifications	TÜV cUL UL
Ambient air temperature for operation	122…149 °F (50…65 °C) (with power derating of 2 % per °C) 32…122 °F (0…50 °C) (without derating)

Permissible ambient air temperature around the device	221 °F (105 °C) power amplifier 230 °F (110 °C) motor
Ambient Air Temperature for Storage	-13…158 °F (-25…70 °C)
Operating altitude	<= 3280.84 ft (1000 m) without derating
Relative humidity	15…85 % without condensation
Vibration resistance	20 m/s² 10…500 Hz) 10 cycles EN/IEC 60068-2-6
Shock resistance	150 m/s² 1000 shocks EN/IEC 60068-2-29
IP degree of protection	IP41 shaft bushing: conforming to EN/IEC 60034-5 IP54 total except shaft bushing: conforming to EN/IEC 60034-5

Ordering and shipping details

Category	US1PC5618288
Discount Schedule	PC56
GTIN	3389119222358
Returnability	No
Country of origin	DE

Packing Units

Unit Type of Package 1	PCE
Nbr. of units in pkg.	1
Package 1 Height	4.646 in (11.800 cm)
Package 1 Width	7.520 in (19.100 cm)
Package 1 Length	15.669 in (39.800 cm)
Package weight(Lbs)	5.644 lb(US) (2.560 kg)

Contractual warranty

Warranty (in months)	18

Environmental Data

Schneider Electric aims to achieve Net Zero status by 2050 through supply chain partnerships, lower impact materials, and circularity via our ongoing “Use Better, Use Longer, Use Again” campaign to extend product lifetimes and recyclability.

Environmental Data explained >

How we assess product sustainability >

Environmental footprint

Total lifecycle Carbon footprint	**606 kg CO2 eq.**
Carbon footprint of the manufacturing phase [A1 to A3]	**18 kg CO2 eq.**
Carbon footprint of the distribution phase [A4]	**0.3 kg CO2 eq.**
Carbon footprint of the installation phase [A5]	**0 kg CO2 eq.**
Carbon footprint of the use phase [B2, B3, B4, B6]	**588 kg CO2 eq.**
Carbon footprint of the end-of-life phase [C1 to C4]	**0.3 kg CO2 eq.**
Environmental Disclosure	Product Environmental Profile

Use Better

Materials and Substances

Packaging made with recycled cardboard	**Yes**
Packaging without single use plastic	**No**
SCIP Number	**C2ce416c-ac1e-4e66-863f-bde9b6d94d11**
EU RoHS Directive	Compliant By Exemption
REACh Regulation	Reference contains Substances of Very High Concern above the threshold
California proposition 65	**WARNING: This product can expose you to chemicals including: Lead and lead compounds, which is known to the State of California to cause cancer and birth defects or other reproductive harm. For more information go to www.P65Warnings.ca.gov**
PVC free	**Yes**

Use Longer

Lifetime extension

Repair	**No**

Use Again

Repack and remanufacture

Circularity Profile	End of Life Information
Take-back	**No**
WEEE Label	**The product must be disposed on European Union markets following specific waste collection and never end up in rubbish bins.**

Dimensions

Integrated Drive with Worm Gear

Dimensions

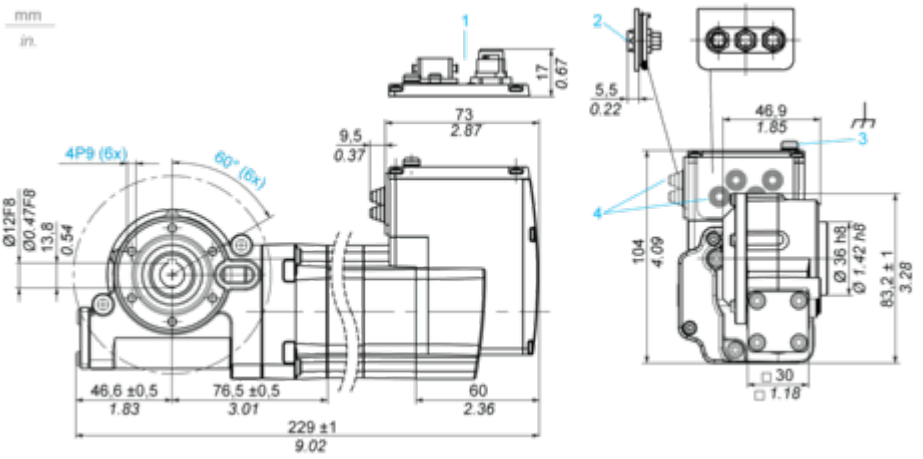

1 Option: industrial connectors
2 Accessories: I/O signal insert with industrial connectors
3 Earth (ground) terminal
4 Accessories: cable entries Ø = 3 ... 9 mm/0.12 ... 0.35 in.

Wiring

Connection Example with 4 I/O Signals

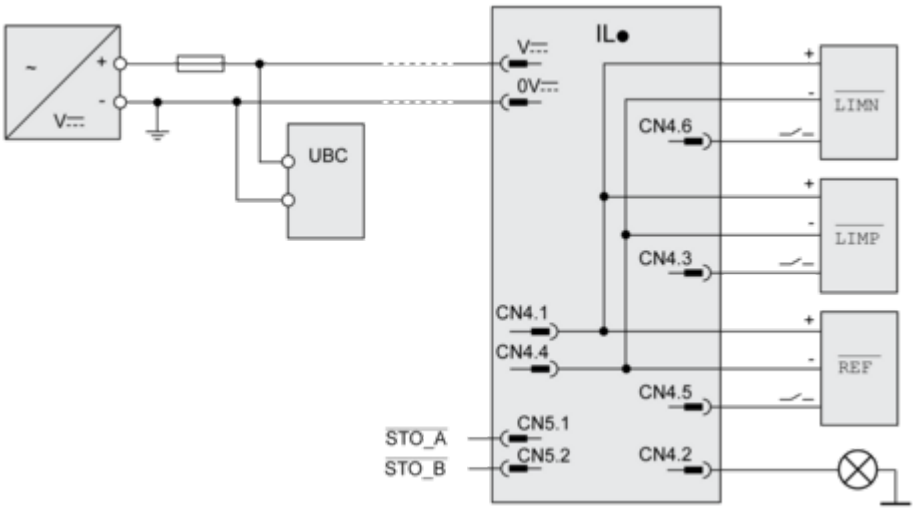

PerformanceCurves

Torque Characteristics

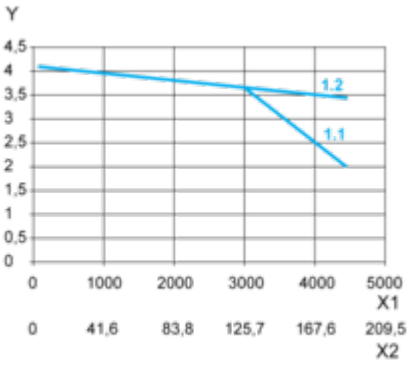

X1 Speed of rotation of motor in rpm
X2 Speed of rotation of gearing in rpm
Y Torque in Nm
1.1 Max. torque at 24 V
1.2 Max. torque at 36 V

Technical Illustration

Dimensions

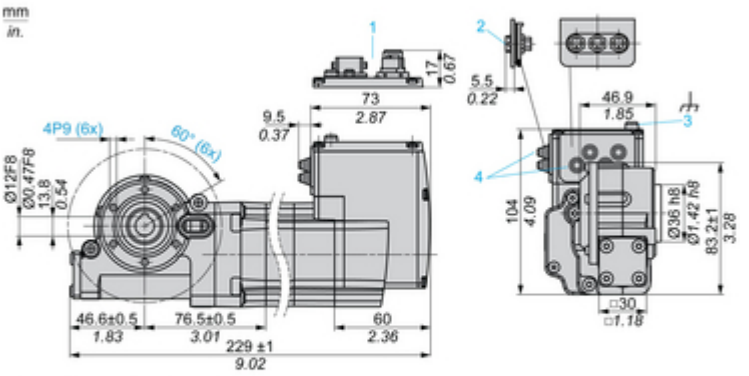

(1) Option: industrial connectors
(2) Accessories: I/O signal insert with industrial connectors
(3) Earth (ground) terminal
(4) Accessories: cable entries Ø = 3 ... 9 mm/0.12 ... 0.35 in.

Technical Illustration

Wiring diagram

Connection Example with 4 I/O Signals

