Product data sheet

Specifications



flat screen, Harmony iPC, 15inch wide display, single touch, for modular box pc

HMIDM7421

Discontinued - Service only

Discontinued on: Jun 20, 2025

To be end-of-service on: Apr 30, 2029

Product availability: Stock - Normally stocked in distribution facility

Main

Range of Product	Harmony iPC
Terminal type	Touchscreen display
Product or Component Type	Flat screen

Complementary

View angle horizontal x vertical	140 x 115°
Contrast Ratio	500:1
Touchscreen resolution	2048 x 2048
Display resolution	1024 x 768 pixels XGA
Display type	LED Colour TFT LCD
Luminance	27.9 fc (300 cd/m²)
Touch panel	Single touch analogue resistive
Function Available	Operate with water on screen
Product Compatibility	Modular Box PC
Display size	15 inch
Aspect ratio	4:3
[Us] rated supply voltage	24 V DC power supply 100...240 V AC power supply
Supply voltage limits	18…36 V
Display colour	16777216 colors
Pixel resolution	2048 x 2048
Local signalling	Status LED
Inrush current	8.9 A
Width	15.4 in (390.7 mm)
Height	11.4 in (290 mm)
Product Weight	9.3 lb(US) (4.2 kg)

Environment

Price is “List Price” and may be subject to a trade discount – check with your local distributor or retailer for actual price.

Disclaimer: This documentation is not intended as a substitute for and is not to be used for determining suitability or reliability of these products for specific user applications

Standards	Class I division 2 CSA C22.2 No 213 CSA C22.2 No 142 UL 6110-2-201 Class I division 2 ANSI/ISA 12-12-01
Pollution degree	2
Product certifications	EAC ATEX C-tick IEC-Ex Marine GL Bridge CE
Operating altitude	6561.68 ft (2000 m)
NEMA degree of protection	NEMA 4X
Ambient air temperature for operation	32…131 °F (0…55 °C)

Ordering and shipping details

Category	US10MC222574
Discount Schedule	0MC2
GTIN	3606480853661
Returnability	Yes
Country of origin	TW

Packing Units

Unit Type of Package 1	PCE
Nbr. of units in pkg.	1
Package 1 Height	9.094 in (23.100 cm)
Package 1 Width	24.331 in (61.800 cm)
Package 1 Length	29.134 in (74.000 cm)
Package weight(Lbs)	15.366 lb(US) (6.970 kg)
Unit Type of Package 2	P12
Number of Units in Package 2	5
Package 2 Height	41.339 in (105.000 cm)
Package 2 Width	31.496 in (80.000 cm)
Package 2 Length	47.244 in (120.000 cm)
Package 2 Weight	154.324 lb(US) (70.000 kg)

Contractual warranty

Warranty (in months)	18

Environmental Data

Schneider Electric aims to achieve Net Zero status by 2050 through supply chain partnerships, lower impact materials, and circularity via our ongoing “Use Better, Use Longer, Use Again” campaign to extend product lifetimes and recyclability.

Environmental Data explained >

How we assess product sustainability >

Environmental footprint

Total lifecycle Carbon footprint	**782 kg CO2 eq.**
Carbon footprint of the manufacturing phase [A1 to A3]	**240 kg CO2 eq.**
Carbon footprint of the distribution phase [A4]	**1 kg CO2 eq.**
Carbon footprint of the installation phase [A5]	**2 kg CO2 eq.**
Carbon footprint of the use phase [B2, B3, B4, B6]	**535 kg CO2 eq.**
Carbon footprint of the end-of-life phase [C1 to C4]	**4 kg CO2 eq.**
Environmental Disclosure	Product Environmental Profile

Use Better

Materials and Substances

F-gas usage performance	**Only air and vacuum used for insulation / breaking, no F-gas including SF6**
Packaging made with recycled cardboard	**Yes**
Packaging without single use plastic	**No**
SCIP Number	**5dc260f8-71ed-4cb7-a2e6-05d0987d6ab8**
EU RoHS Directive	Compliant By Exemption
REACh Regulation	Reference contains Substances of Very High Concern above the threshold
California proposition 65	**WARNING: This product can expose you to chemicals including: Lead and lead compounds, which is known to the State of California to cause cancer and birth defects or other reproductive harm. For more information go to www.P65Warnings.ca.gov**
Halogen content performance	**Product contains halogen above thresholds**
PVC free	**No**
Silicon free	**No**

Use Longer

Lifetime extension

Repair	**No**

Use Again

Repack and remanufacture

Recyclability potential, in %	**39**

Circularity Profile	End of Life Information
Take-back	No
WEEE Label	The product must be disposed on European Union markets following specific waste collection and never end up in rubbish bins.

Dimensions Drawings

Dimensions

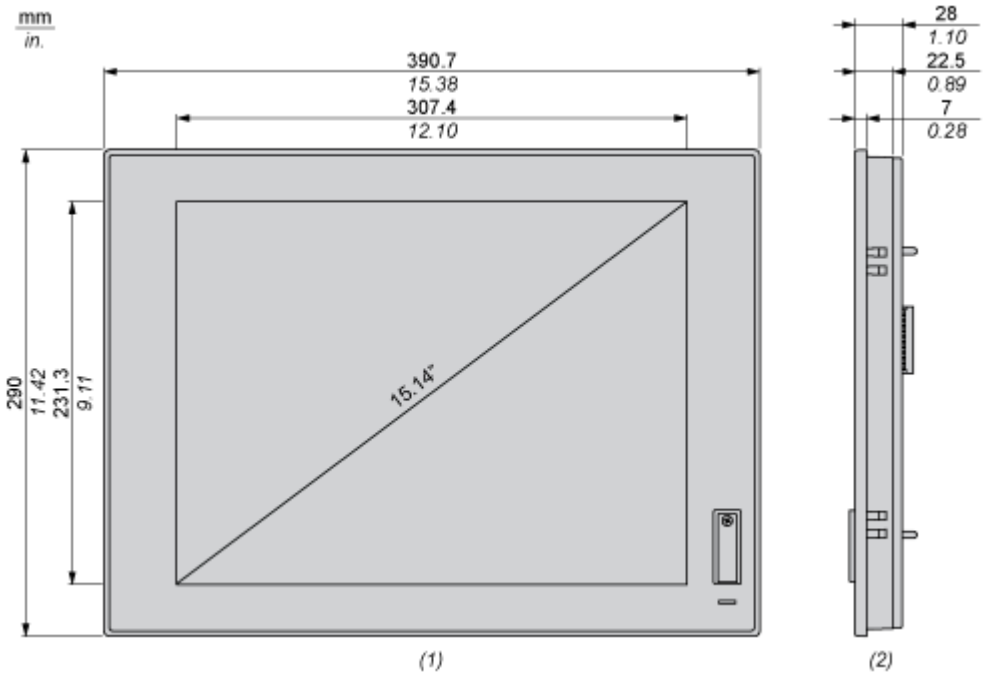

(1) Front view

(2) Right view

Mounting and Clearance

Spacing Requirements

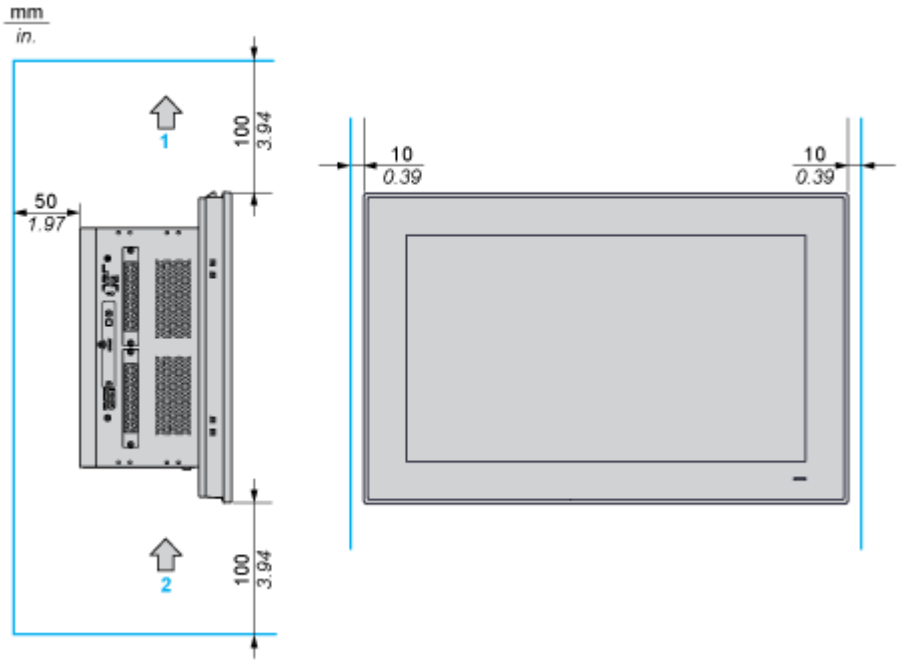

1 : Air out

2 : Air in

Mounting Orientation

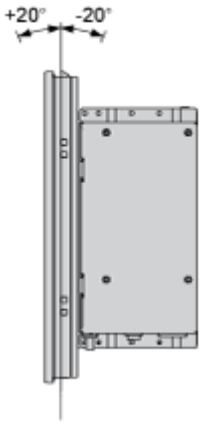

Panel Cut Dimensions

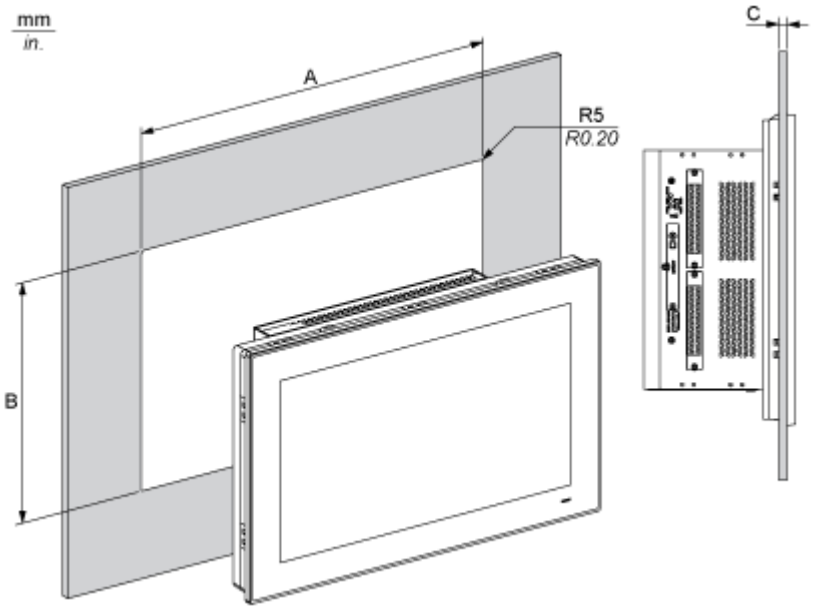

A		B		C		R	
mm	in.	mm	in.	mm	in.	mm	in.
383.5	15.09	282.5	11.12	2...6	0.08...0.23	5	0.20