Product data sheet

Specifications



soft starter for asynchronous motor, Altistart 22, control 230V, 230 to 500V, 15 to 37kW

ATS22D62S6

Product availability: Non-Stock - Not normally stocked in distribution facility

Main

Range of Product	Altistart 22
Product or Component Type	Soft starter
Product destination	Asynchronous motors
Product Specific Application	Pumps and fans
Component name	ATS22
Phase	3 phase
[Us] rated supply voltage	230...600 V - 15...10 %
Motor power kW	15 kW 230 V 30 kW 400 V 30 kW 440 V 37 kW 500 V
Factory setting current	52 A
Power dissipation in W	59 W for standard applications
Utilisation category	AC-53A
Type of start	Start with torque control (current limited to 3.5 In)
IcL starter rating	62 A connection in the motor supply line for standard applications
IP Degree of Protection	IP20

Complementary

Assembly style	With heat sink
Function Available	Internal bypass
Supply voltage limits	195…660 V
Supply frequency	50...60 Hz - 10...10 %
Network Frequency	45...66 Hz
Device connection	In the motor supply line
[Uc] control circuit voltage	230 V - 15...10 % 50/60 Hz
Control circuit consumption	20 W
Discrete output number	2
Discrete output type	Relay outputs R1 230 V running, alarm, trip, stopped, not stopped, starting, ready C/O Relay outputs R2 230 V running, alarm, trip, stopped, not stopped, starting, ready C/O
Minimum switching current	100 mA 12 V DC relay outputs)

Price is “List Price” and may be subject to a trade discount – check with your local distributor or retailer for actual price.

Disclaimer: This documentation is not intended as a substitute for and is not to be used for determining suitability or reliability of these products for specific user applications

Maximum switching current	5 A 250 V AC resistive 1 relay outputs 5 A 30 V DC resistive 1 relay outputs 2 A 250 V AC inductive 0.4 20 ms relay outputs 2 A 30 V DC inductive 7 ms relay outputs
Discrete input number	3
Discrete input type	LI1, LI2, LI3) logic, 5 mA 4.3 kOhm
Discrete input voltage	24 V <= 30 V
Discrete input logic	Positive logic LI1, LI2, LI3 < 5 V <= 2 mA > 11 V, >= 5 mA
Output current	0.4...1 Icl adjustable
PTC probe input	750 Ohm
Communication Port Protocol	Modbus
Connector Type	1 RJ45
Communication data link	Serial
Physical interface	RS485 multidrop
Transmission Rate	4800, 9600 or 19200 bps
Installed device	31
Protection type	Phase failure line Thermal protection motor Thermal protection starter
Marking	CE
Type of cooling	Forced convection
Operating position	Vertical +/- 10 degree
Height	11.6 in (295 mm)
Width	5.7 in (145 mm)
Depth	8.1 in (207 mm)
Product Weight	26.5 lb(US) (12 kg)
Motor power range AC-3	30…50 kW 480…500 V 3 phase 15…25 kW 200…240 V 3 phase 30…50 kW 380…440 V 3 phase
Motor starter type	Soft starter

Environment

Electromagnetic compatibility	Conducted and radiated emissions level A conforming to IEC 60947-4-2 Damped oscillating waves level 3 conforming to IEC 61000-4-12 Electrostatic discharge level 3 conforming to IEC 61000-4-2 Immunity to electrical transients level 4 conforming to IEC 61000-4-4 Immunity to radiated radio-electrical interference level 3 conforming to IEC 61000-4-3 Voltage/current impulse level 3 conforming to IEC 61000-4-5
Standards	IEC 60947-4-2
Product Certifications	CCC UL CSA GOST C-tick
Vibration resistance	1 gn (f= 13…200 Hz) conforming to IEC 60068-2-6 1.5 mm (f= 2…13 Hz) conforming to IEC 60068-2-6
Shock resistance	15 gn 11 ms IEC 60068-2-27
Noise level	45 dB
Pollution degree	Level 2 IEC 60664-1

Relative humidity	0…95 % without condensation or dripping water IEC 60068-2-3
Ambient air temperature for operation	14…104 °F (-10…40 °C) (without derating) 104…140 °F (40…60 °C) (with current derating 2.2 % per °C)
Ambient Air Temperature for Storage	-13…158 °F (-25…70 °C)
Operating altitude	<= 3280.84 ft (1000 m) without derating > 3280.84...< 6561.68 ft (> 1000...< 2000 m) with current derating of 2.2 % per additional 100 m

Ordering and shipping details

Category	US1CP1G22576
Discount Schedule	CP1G
GTIN	3606480167300
Returnability	Yes
Country of origin	ID

Packing Units

Unit Type of Package 1	PCE
Nbr. of units in pkg.	1
Package 1 Height	11.8 in (30.0 cm)
Package 1 Width	9.8 in (25.0 cm)
Package 1 Length	14.2 in (36.0 cm)
Package weight(Lbs)	18.41 lb(US) (8.35 kg)
Unit Type of Package 2	P06
Number of Units in Package 2	6
Package 2 Height	28.9 in (73.5 cm)
Package 2 Width	31.5 in (80.0 cm)
Package 2 Length	23.6 in (60.0 cm)
Package 2 Weight	141.003 lb(US) (63.958 kg)

Contractual warranty

Warranty (in months)	18

Environmental Data

Schneider Electric aims to achieve Net Zero status by 2050 through supply chain partnerships, lower impact materials, and circularity via our ongoing “Use Better, Use Longer, Use Again” campaign to extend product lifetimes and recyclability.

Environmental Data explained >

How we assess product sustainability >

Use Better

Materials and Substances

Packaging made with recycled cardboard	No
Packaging without single use plastic	No
SCIP Number	7f28cbce-306d-4c94-ba04-b506c5522d63
EU RoHS Directive	Compliant By Exemption
REACh Regulation	Reference contains Substances of Very High Concern above the threshold
California proposition 65	WARNING: This product can expose you to chemicals including: Lead and lead compounds, which is known to the State of California to cause cancer and birth defects or other reproductive harm. For more information go to www.P65Warnings.ca.gov

Use Longer

Lifetime extension

Repair	No

Use Again

Repack and remanufacture

Take-back	No
WEEE Label	The product must be disposed on European Union markets following specific waste collection and never end up in rubbish bins.

Dimensions Drawings

Frame Size B

Dimensions

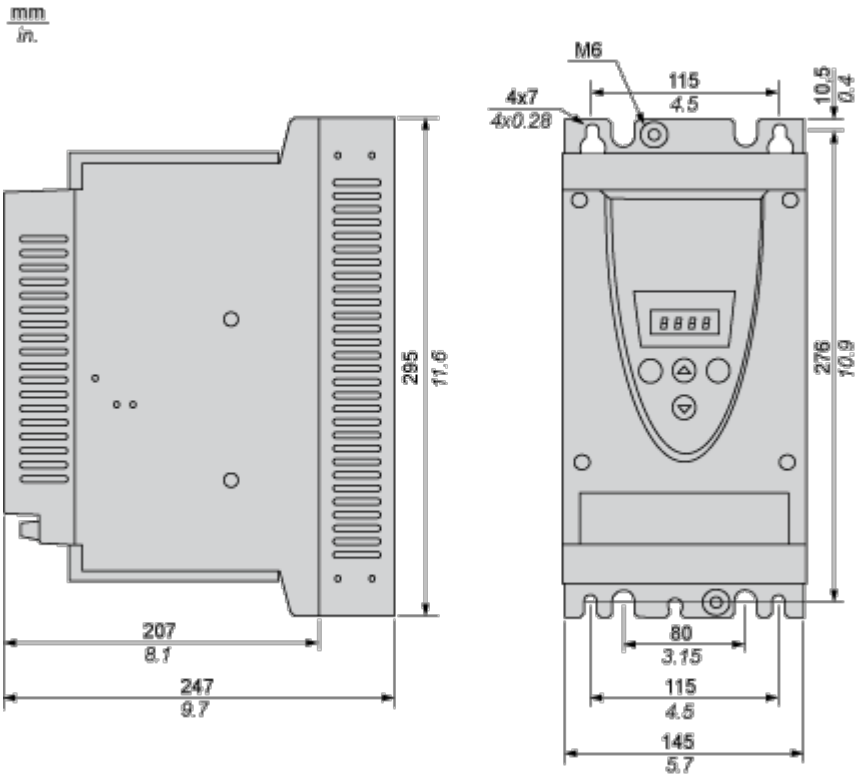

Mounting and Clearance

Precautions

Standards

The Altistart 22 soft starter is compliant with pollution Degree 2 as defined in NEMA ICS1-1 or IEC 60664-1.
For environment pollution degree 3, install the Altistart 22 soft starter inside a cabinet type 12 or IP54.

DANGER

HAZARD OF ELECTRIC SHOCK, EXPLOSION, OR ARC FLASH

ATS22 soft starters are open devices and must be mounted in a suitable enclosure.

Failure to follow these instructions will result in death or serious injury.

Air Circulation

Leave sufficient free space to help the air required for cooling purposes to circulate from the bottom to the top of the unit.

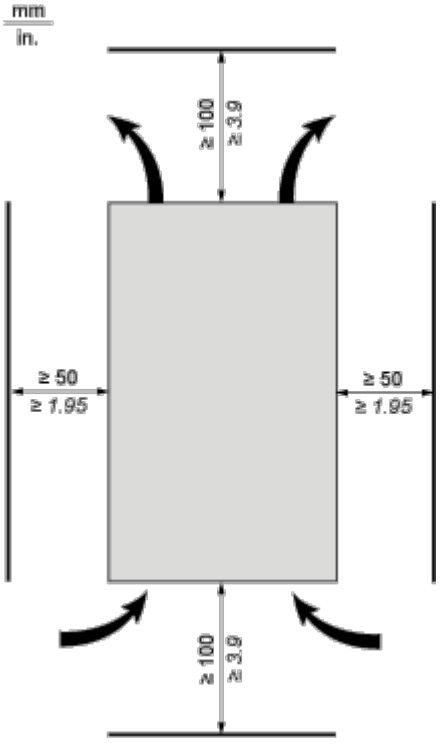

Overheating

To avoid the soft starter to overheat, respect the following recommendations:

- Mount the Altistart 22 Soft Starter within ± 10° of vertical.
- Do not locate the Altistart 22 Soft Starter near heat radiating elements.
- Electrical current through the Altistart 22 Soft Starter will result in heat losses that must be dissipated into the ambient air immediately surrounding the soft starter. To help prevent a thermal fault, provide sufficient enclosure cooling and/or ventilation to limit the ambient temperature around the soft starter.
- If several soft starters are installed in a control panel, arrange them in a row. Do not stack soft starters. Heat generated from the bottom soft starter can adversely affect the ambient temperature around the top soft starter.

Mounting

Connection Between the Fan and the Altistart 22 Soft Starter

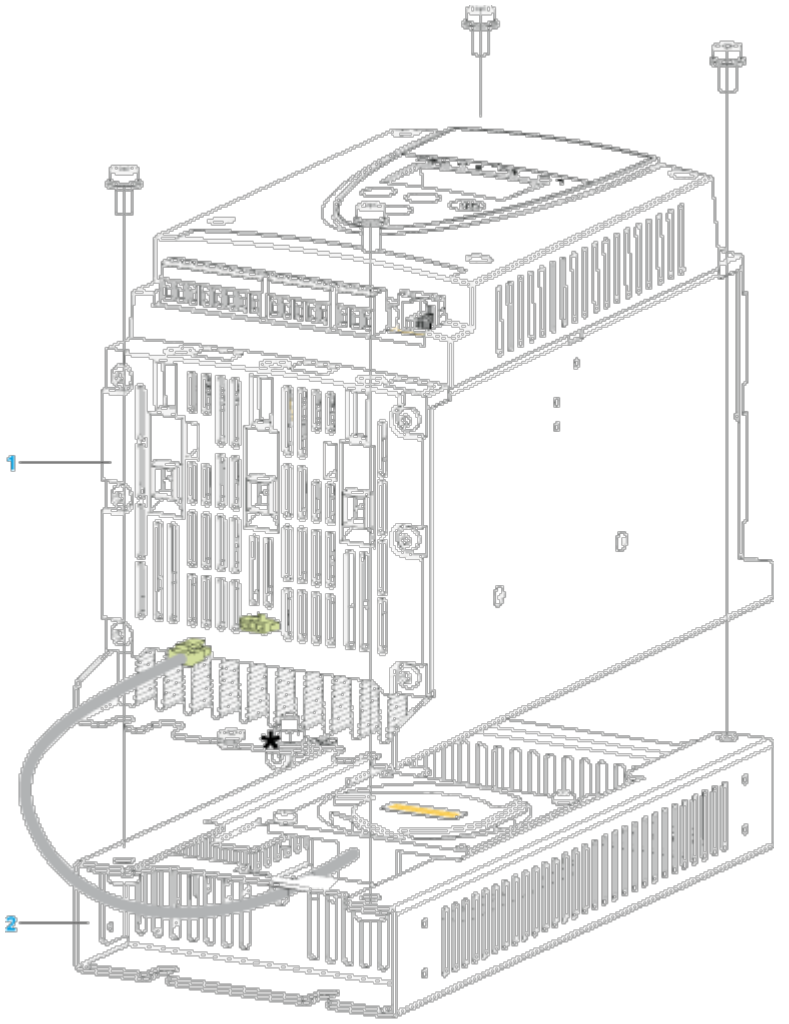

1 Altistart 22 Soft Starter

2 Fan

Wall mounted or Floor-standing Enclosure with IP 23 Degree of protection

Introduction

To help proper air circulation in the soft starter, grilles and forced ventilation can be installed.

Ventilation Grilles

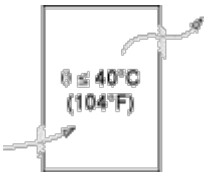

Forced Ventilation Unit

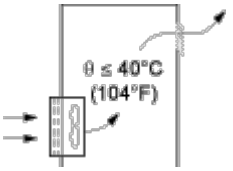

Connections and Schema

Power Terminal

Cage Style

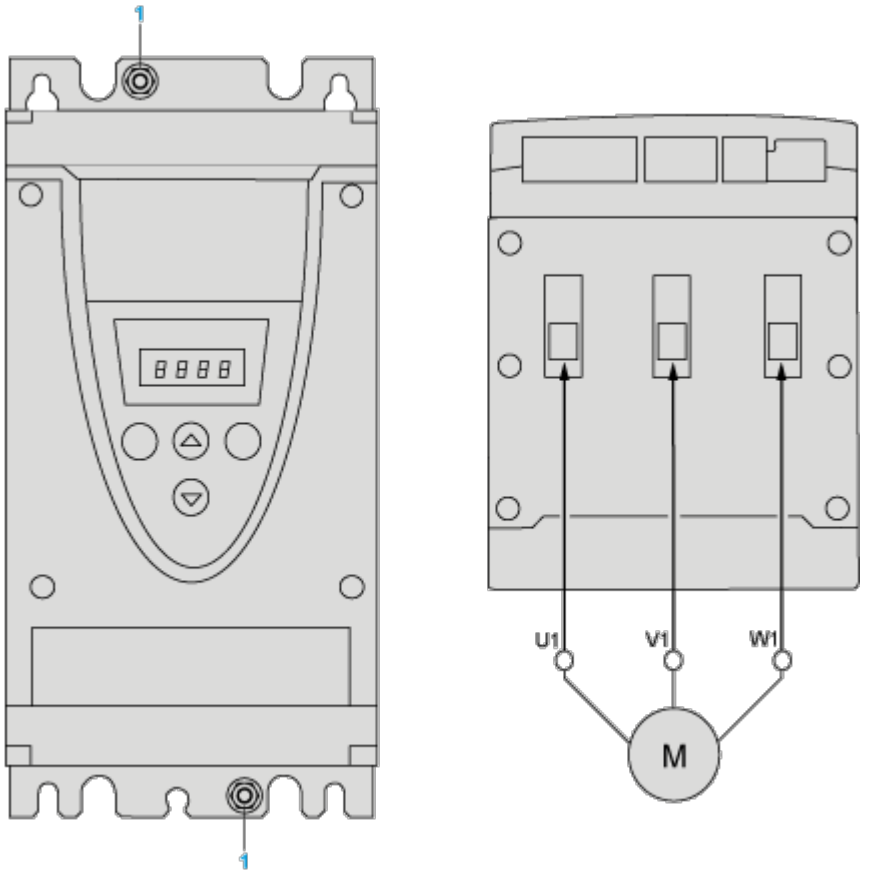

1 Ground connection

Power connections, minimum and maximum wiring capabilities, tightening torque

			IEC cable	UL cable
Power supply and output to motor	Size/gauge	min	4 mm (a)	10 AWG (a)
		max	50 mm	1/0 AWG
	Tightening torque	min	8 N.m	70 lb.in
		max	8 N.m	70 lb.in
	Strip length		15 mm	0.6 in.

Power connections, minimum required wiring section

IEC cable mm² (Cu 70°C/158°F) (1)	UL cable AWG (Cu 75°C/167°F) (1)
16	4

230 Vac control, logic Inputs (LI) 24 Vdc, 3-wire control

With Line Contactor, Freewheel or Controlled Stop

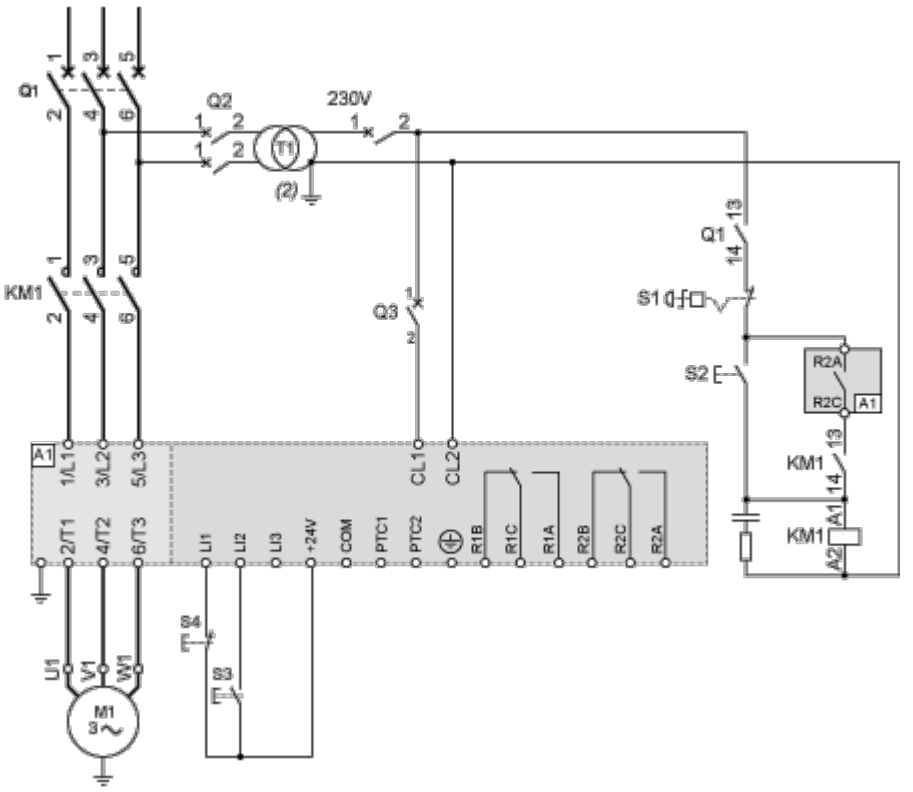

230 Vac control, logic Inputs (LI) 24 Vdc, 2-wire control,freewheel stop

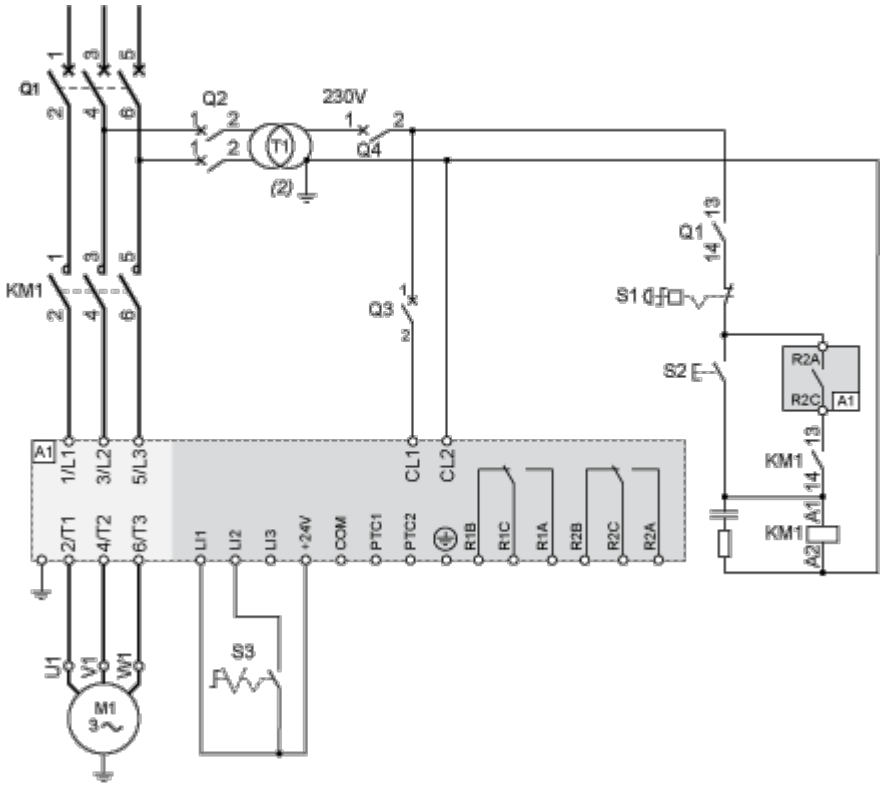

Performance Curves

Motor Thermal Protection - Cold Curves

Curves

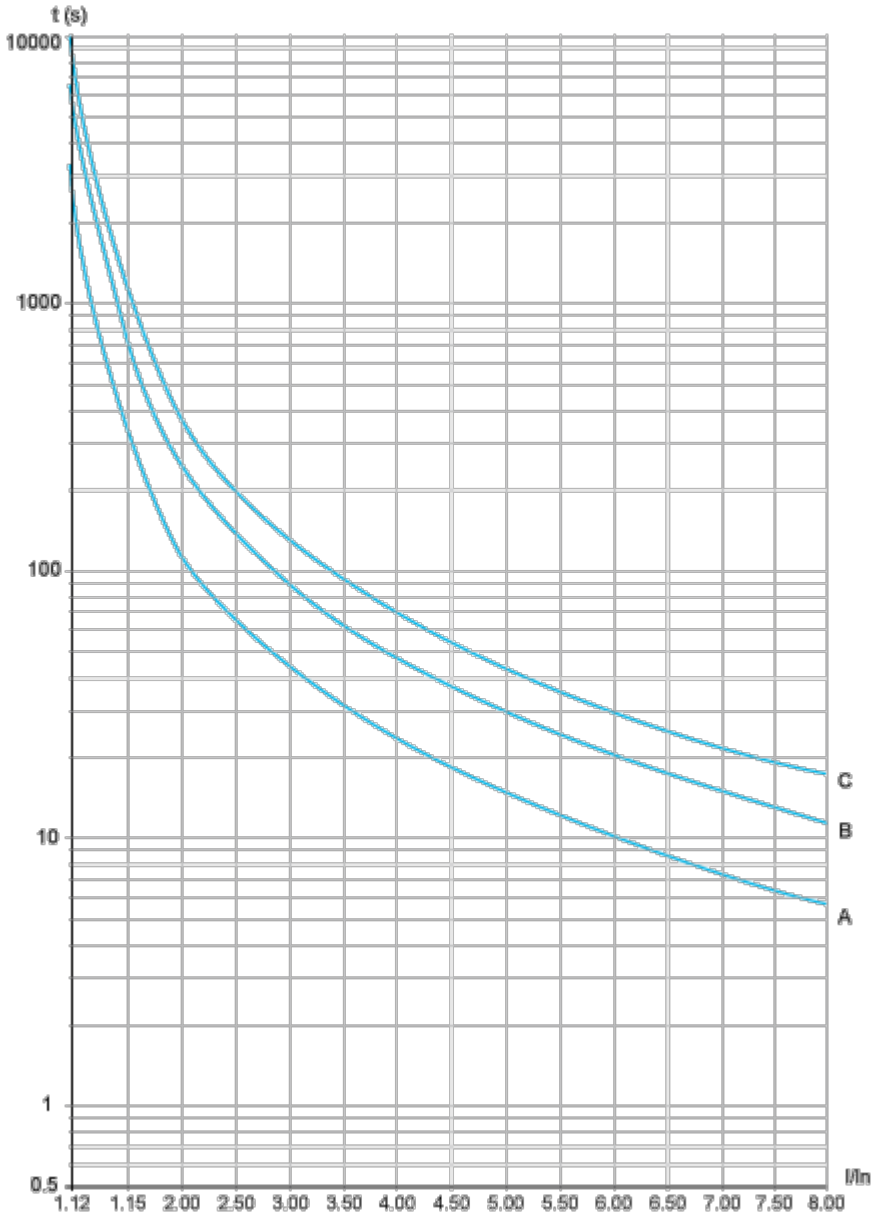

A Class 10

B Class 20

C Class 30

Trip time for a Standard Application (Class 10)

3.5 In
32 s

Trip time for a Severe Application (Class 20)

3.5 In
63 s

Trip time for a Severe Application (Class 30)

3.5 In
95 s

Motor Thermal Protection - Warm Curves

Curves

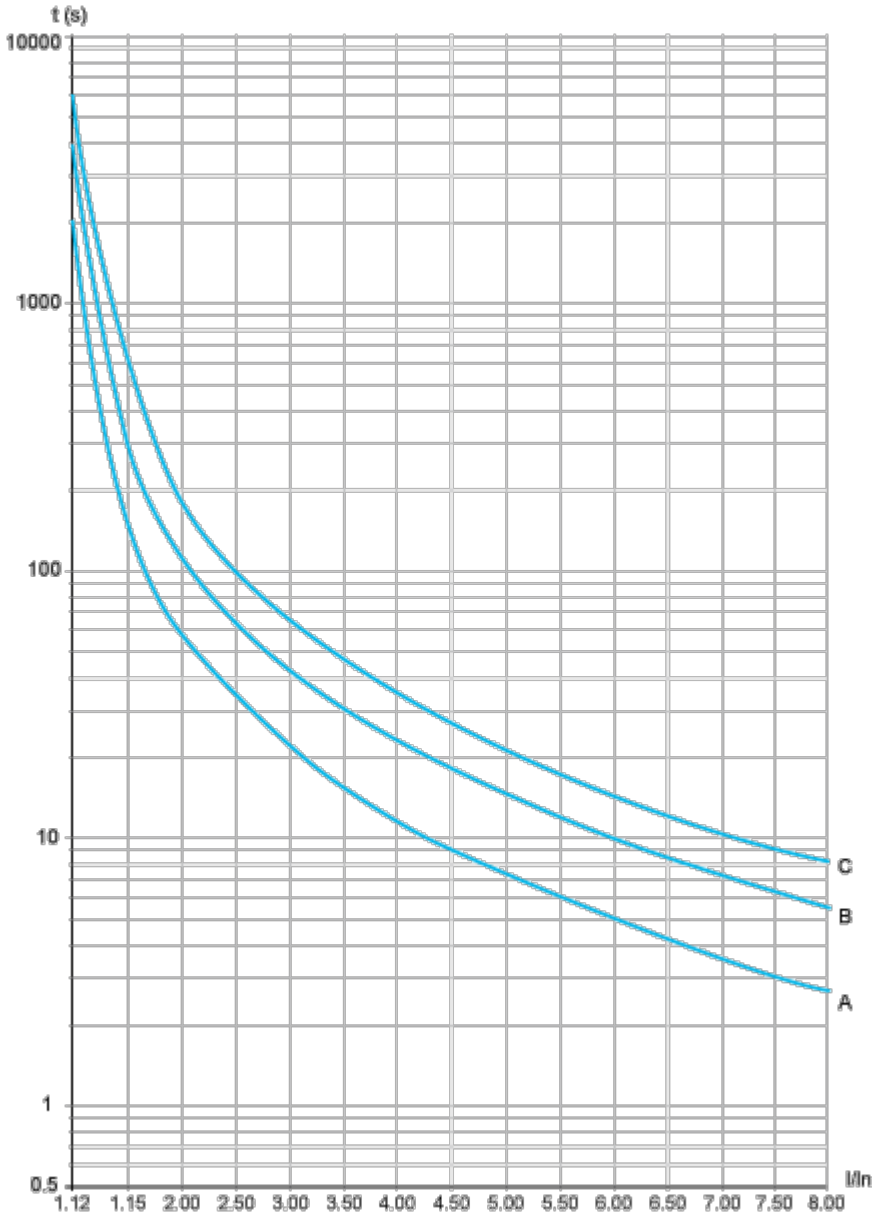

A Class 10

B Class 20

C Class 30

Trip time for a Standard Application (Class 10)

3.5 In
16 s

Trip time for a Severe Application (Class 20)

3.5 In

32 s

Trip time for a Severe Application (Class 30)

3.5 In
48 s

Image of product / Alternate images

Alternative





