Product data sheet

Specifications



Rotating beacon, Harmony XVR, 120mm, red, with buzzer 50…90dB, 24V AC DC

XVR12B04S

Product availability: Stock - Normally stocked in distribution facility

Main

Range of Product	Harmony XVR
Product or Component Type	Prewired rotating mirror beacon
Sound signalling	Buzzer
Device short name	XVR
Mounting diameter	4.7 in (120 mm)
IP degree of protection	IP23 IEC 60529
[Us] rated supply voltage	24 V AC/DC
Light source	High luminosity LED, red
Noise level	50…90 dB continuous or intermittent tone)1 m

Complementary

Material	ABS (acrylonitrile butadiene-styrene): body part AS: globe
CAD overall width	4.7 in (120 mm)
CAD overall depth	4.7 in (120 mm)
Product Weight	1.1 lb(US) (0.5 kg)
Marking	CE
Product mounting	By 3 M5 screws
Supply voltage limits	19…30 V DC 21.6…26.4 V AC
[Uimp] rated impulse withstand voltage	0.8 kV
Current Consumption	196 mA
Flashing frequency	2.3 Hz
Clamping Connection Capacity	0.83 mm²
AWG Gauge	AWG 18
Cable length	15.7 in (400 mm)

Environment

Standards	IEC 61000-6-4 IEC 61000-6-2
Protective treatment	TC
Ambient Air Temperature for Storage	-31…158 °F (-35…70 °C)
Ambient Air Temperature for Operation	14…122 °F (-10…50 °C)

Price is “List Price” and may be subject to a trade discount – check with your local distributor or retailer for actual price.

Disclaimer: This documentation is not intended as a substitute for and is not to be used for determining suitability or reliability of these products for specific user applications

Electrical shock protection class	Class II IEC 61140

Ordering and shipping details

Category	US100XV22617
Discount Schedule	00XV
GTIN	3606480033230
Returnability	Yes
Country of origin	ID

Packing Units

Unit Type of Package 1	PCE
Nbr. of units in pkg.	1
Package 1 Height	7.677 in (19.500 cm)
Package 1 Width	5.433 in (13.800 cm)
Package 1 Length	5.512 in (14.000 cm)
Package weight(Lbs)	23.457 oz (665.000 g)
Unit Type of Package 2	S04
Number of Units in Package 2	8
Package 2 Height	11.811 in (30.000 cm)
Package 2 Width	15.748 in (40.000 cm)
Package 2 Length	23.622 in (60.000 cm)
Package 2 Weight	14.379 lb(US) (6.522 kg)

Contractual warranty

Warranty (in months)	18

Environmental Data

Schneider Electric aims to achieve Net Zero status by 2050 through supply chain partnerships, lower impact materials, and circularity via our ongoing “Use Better, Use Longer, Use Again” campaign to extend product lifetimes and recyclability.

Environmental Data explained >

How we assess product sustainability >

Environmental footprint

Total lifecycle Carbon footprint	**23 kg CO2 eq.**
Carbon footprint of the manufacturing phase [A1 to A3]	**13 kg CO2 eq.**
Carbon footprint of the distribution phase [A4]	**0.1 kg CO2 eq.**
Carbon footprint of the installation phase [A5]	**0 kg CO2 eq.**
Carbon footprint of the use phase [B2, B3, B4, B6]	**10 kg CO2 eq.**
Carbon footprint of the end-of-life phase [C1 to C4]	**0.2 kg CO2 eq.**
Environmental Disclosure	**Product Environmental Profile**

Use Better

Materials and Substances

Packaging made with recycled cardboard	**Yes**
Packaging without single use plastic	**No**
EU RoHS Directive	**Compliant By Exemption**
REACh Regulation	**Reference contains Substances of Very High Concern above the threshold**
California proposition 65	**WARNING: This product can expose you to chemicals including: Lead and lead compounds, which is known to the State of California to cause cancer and birth defects or other reproductive harm. For more information go to www.P65Warnings.ca.gov**

Use Longer

Lifetime extension

Repair	**No**

Use Again

Repack and remanufacture

Circularity Profile	**End of Life Information**
Take-back	**No**

Dimensions Drawings

Rotating Mirror Beacon

Dimensions

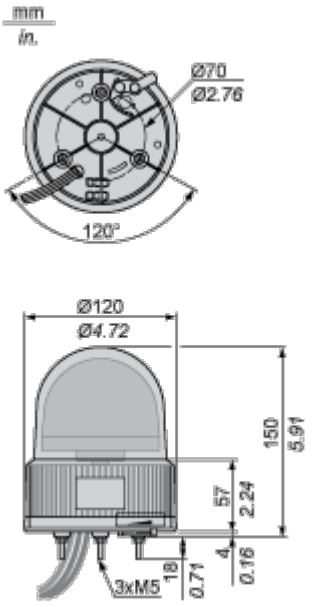

Mounting and Clearance

Rotating Mirror Beacon

Panel Cut-out

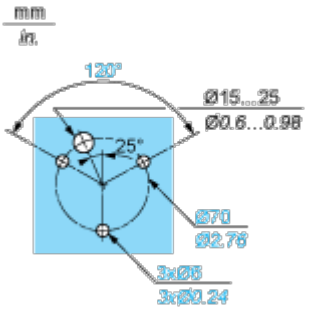

Technical Illustration

Dimensions

