Product data sheet

Specifications



To be discontinued

standard digital input kit - Modicon STB - 115 V AC - 2 I

STBDAI5230K

To be discontinued on: Dec 1, 2027

To be end-of-service on: Dec 31, 2035

Product availability: Non-Stock - Not normally stocked in distribution facility

Main

Range of Product	Modicon STB distributed I/O solution
Product or Component Type	Standard digital input kit
Kit composition	STBXTS2110, 5-terminal spring clamp connector STBXBA2000 base STBXTS1110, 5-terminal screw type connector STBDAI5230 module
Product Compatibility	I/O base STBXBA2000 Power distribution module STBPDT2100/2105
Discrete input number	2
Discrete input voltage	0...20 Vtype 1 74...132 Vtype 1

Complementary

Discrete input compatibility	2 type 1 at 115 V AC
Voltage state 1 guaranteed	At state 1 74...132 V
Voltage state 0 guaranteed	0...20 V at state 0
Current state 1 guaranteed	>= 4 mA
Current state 0 guaranteed	<= 2 mA
Discrete input frequency	50 Hz (47…63 Hz) 60 Hz
Response time on input	1.5 ms (off to on) 1.5 ms (on to off)
Protection Type	Input protection by resistor limited
Input protection type	Power protection integrated fuse on PDM time lag 10 A Input protection resistor-limited
Current supplied by sensor	<= 60 mA per channel
Power supply type	Power distribution module
Typical current consumption	40 mA 5 V DC for logic bus
Electrical Connection	Screw terminal
Isolation between channels and bus	1780 Vrms for 1 minute
Local signalling	1 LED (green) for module status (RDY) 1 LED per channel (green) for channel status (IN1 to IN2) LED (red) for module error (ERR)
Overvoltage category	II

Price is “List Price” and may be subject to a trade discount – check with your local distributor or retailer for actual price.

Disclaimer: This documentation is not intended as a substitute for and is not to be used for determining suitability or reliability of these products for specific user applications

Height	0.7 in (18.4 mm)
Width	4.9 in (125 mm)
Depth	2.6 in (65.1 mm)
Product Weight	0.26 lb(US) (0.12 kg)

Environment

IP Degree of Protection	IP20
Marking	CE
Product certifications	CSA FM Class 1 Division 2 UL
Standards	EN/IEC 61131-2 type 1
Ambient air temperature for operation	32…140 °F (0…60 °C) without derating)
Ambient air temperature for storage	-40…185 °F (-40…85 °C) without derating
Relative humidity	95 % 140 °F (60 °C) without condensation
Operating altitude	<= 6561.68 ft (2000 m)
Pollution degree	2
Vibration resistance	3 gn 58…150 Hz) on 35 mm DIN rail 5 gn 58…150 Hz) on 35 mm DIN rail +/- 3.5 mm 10…58 Hz)
Shock resistance	30 gn 11 msIEC 88 reference 2-27

Ordering and shipping details

Category	US1PC3218215
Discount Schedule	PC32
GTIN	3595863989427
Returnability	No
Country of origin	ID

Packing Units

Unit Type of Package 1	PCE
Nbr. of units in pkg.	1
Package 1 Height	1.181 in (3.000 cm)
Package 1 Width	3.150 in (8.000 cm)
Package 1 Length	5.118 in (13.000 cm)
Package weight(Lbs)	4.903 oz (139.000 g)
Unit Type of Package 2	S02
Number of Units in Package 2	28
Package 2 Height	5.906 in (15.000 cm)
Package 2 Width	11.811 in (30.000 cm)
Package 2 Length	15.748 in (40.000 cm)
Package 2 Weight	9.621 lb(US) (4.364 kg)

Contractual warranty

Warranty (in months)	18

Environmental Data

Schneider Electric aims to achieve Net Zero status by 2050 through supply chain partnerships, lower impact materials, and circularity via our ongoing “Use Better, Use Longer, Use Again” campaign to extend product lifetimes and recyclability.

Environmental Data explained >

How we assess product sustainability >

Use Better

Materials and Substances

Packaging made with recycled cardboard	**No**
Packaging without single use plastic	**No**
SCIP Number	**6830dd70-e4bc-47df-85c7-e41f888576f4**
EU RoHS Directive	**Compliant By Exemption**
REACh Regulation	**Reference contains Substances of Very High Concern above the threshold**
California proposition 65	**WARNING: This product can expose you to chemicals including: Lead and lead compounds, which is known to the State of California to cause cancer and birth defects or other reproductive harm. For more information go to www.P65Warnings.ca.gov**

Use Longer

Lifetime extension

Repair	**No**

Use Again

Repack and remanufacture

Take-back	**No**

Dimensions Drawings

Dimensions

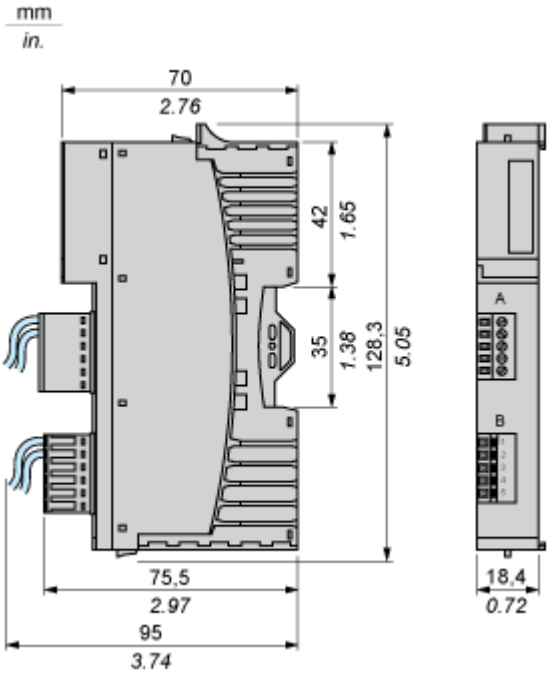

Connections and Schema

Wiring Diagram

Example

1 three-wire sensor and 1two-wire sensor

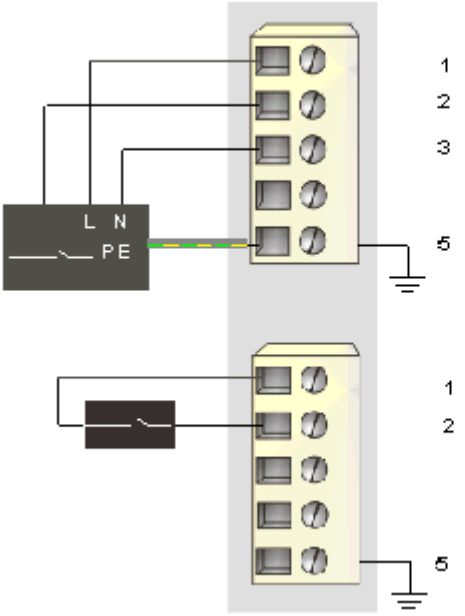

Pin	Top Connector	Bottom Connector
1	115 VAC sensor bus power (L)	115 VAC sensor bus power (L)
2	input from sensor 1	input from sensor 2
3	field power neutral (to the module)	field power neutral (to the module)
4	field power neutral (to the module)	field power neutral (to the module)
5	protective earth	protective earth