Product data sheet

Specifications



To be discontinued

standard analog input kit, Modicon STB, 4 to 20mA, 8I, 15 bits with sign

STBACI1400K

To be discontinued on: Dec 1, 2027

To be end-of-service on: Dec 31, 2035

Product availability: Stock - Normally stocked in distribution facility

Main

Range of Product	Modicon STB distributed I/O solution
Product or Component Type	Standard analog input kit
Kit composition	STBXTS1100, 6-terminal screw type connector STBXTS2100, 6-terminal spring clamp connector STBACI1400 module STBXBA2000 base
Product Compatibility	Power distribution module STBPDT3100/3105 Mounting base STBXBA2000
Analogue input number	8
Analogue output number	0

Complementary

Update time	22 ms
Hot swapping fallback	Yes for standard NIMs
Height	0.7 in (18.4 mm)
Width	5.05 in (128.3 mm)
Depth	2.8 in (70 mm)

Environment

Marking	CE
Relative humidity	95 % 140 °F (60 °C) without condensation

Ordering and shipping details

Category	US1PC3218215
Discount Schedule	PC32
GTIN	3595863948400
Returnability	Yes
Country of origin	ID

Packing Units

Unit Type of Package 1	PCE
Nbr. of units in pkg.	1
Package 1 Height	1.0 in (2.5 cm)

Price is “List Price” and may be subject to a trade discount – check with your local distributor or retailer for actual price.

Disclaimer: This documentation is not intended as a substitute for and is not to be used for determining suitability or reliability of these products for specific user applications

Package 1 Width	3.1 in (8.0 cm)
Package 1 Length	5.1 in (13.0 cm)
Package weight(Lbs)	5.2 oz (147.0 g)
Unit Type of Package 2	S02
Number of Units in Package 2	28
Package 2 Height	5.9 in (15 cm)
Package 2 Width	11.8 in (30 cm)
Package 2 Length	15.7 in (40 cm)
Package 2 Weight	10.013 lb(US) (4.542 kg)
Unit Type of Package 3	P06
Number of Units in Package 3	448
Package 3 Height	29.5 in (75.0 cm)
Package 3 Width	23.6 in (60.0 cm)
Package 3 Length	31.5 in (80.0 cm)
Package 3 Weight	286.6 lb(US) (130 kg)

Contractual warranty

Warranty (in months)	18

Environmental Data

Schneider Electric aims to achieve Net Zero status by 2050 through supply chain partnerships, lower impact materials, and circularity via our ongoing “Use Better, Use Longer, Use Again” campaign to extend product lifetimes and recyclability.

Environmental Data explained >

How we assess product sustainability >

Use Better

Materials and Substances

Packaging made with recycled cardboard	No
Packaging without single use plastic	No
SCIP Number	6830dd70-e4bc-47df-85c7-e41f888576f4
EU RoHS Directive	Compliant By Exemption
REACh Regulation	Reference contains Substances of Very High Concern above the threshold
California proposition 65	WARNING: This product can expose you to chemicals including: Lead and lead compounds, which is known to the State of California to cause cancer and birth defects or other reproductive harm. For more information go to www.P65Warnings.ca.gov

Use Longer

Lifetime extension

Repair	No

Use Again

Repack and remanufacture

Take-back	No

Dimensions Drawings

Dimensions

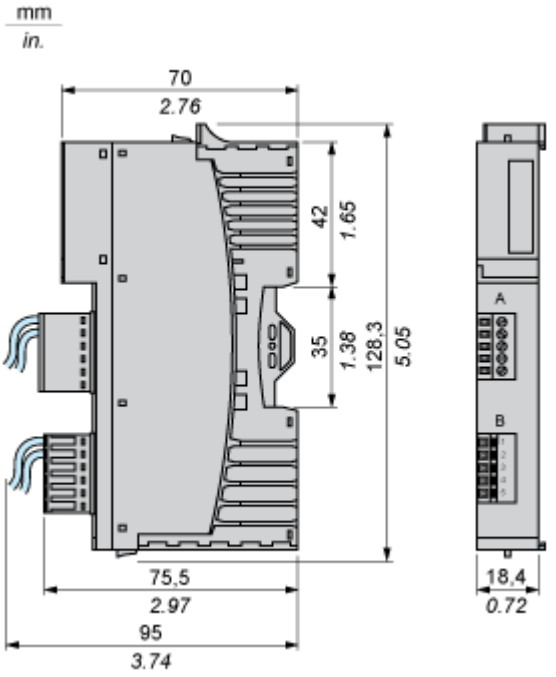

Connections and Schema

Wiring Diagram

Example

8 isolated analog sensors, external 24 VDC power supply

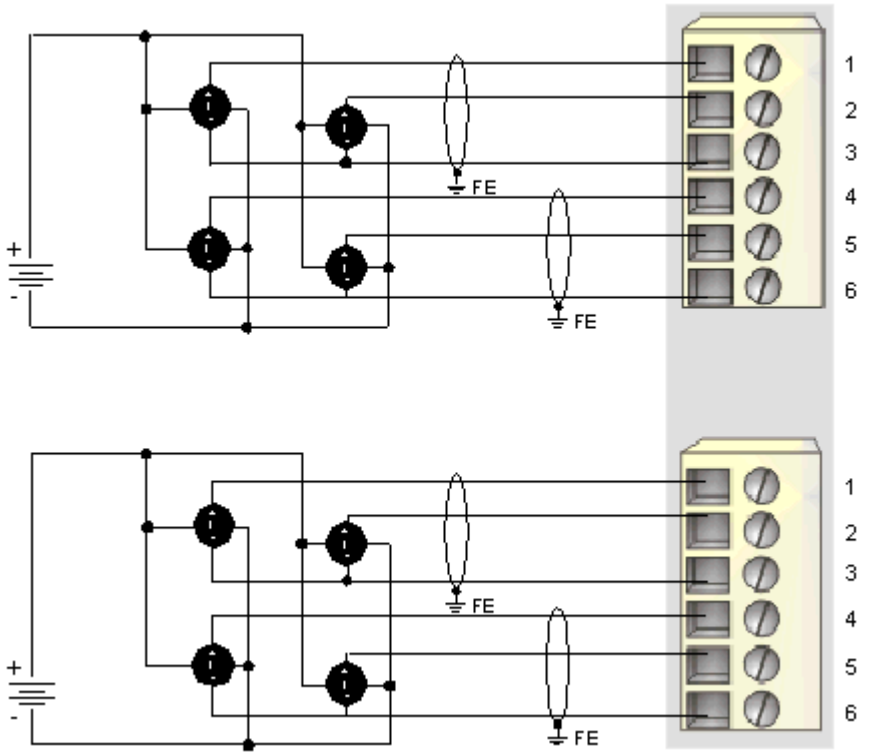

Pin	Top Connections	Bottom Connections
1	current in 1	current in 5
2	current in 2	current in 6
3	return	return
4	current in 3	current in 7
5	current in 4	current in 8
6	return	return