Product data sheet

Specifications



TeSys Deca control relay, 5 NO, 600 V, 120 VAC 50/60 Hz coil

CAD50G7

Product availability: Stock - Normally stocked in distribution facility

Main

Range	TeSys TeSys Deca
Product name	TeSys CAD
Product or Component Type	Control relay
Device short name	CAD
Contactor application	Control circuit

Complementary

Utilisation category	AC-14 AC-15 DC-13
Pole contact composition	5 NO
[Ue] rated operational voltage	<= 690 V AC 25...400 Hz
Control circuit type	AC 50/60 Hz
[Uc] control circuit voltage	120 V DC
[Uimp] rated impulse withstand voltage	6 kV IEC 60947
[Ith] conventional free air thermal current	10 A (at 140 °F (60 °C))
Irms rated making capacity	140 A AC IEC 60947-5-1 250 A DC IEC 60947-5-1
[Icw] rated short-time withstand current	100 A - 1 s 120 A - 500 ms 140 A - 100 ms
Associated fuse rating	10 A gG conforming to IEC 60947-5-1
[Ui] rated insulation voltage	600 V UL 600 V CSA 690 V IEC 60947-5-1
Mounting Support	Plate Rail
Connections - terminals	screw clamp terminals 1 0.002…0.006 in² (1…4 mm²)flexible without cable end screw clamp terminals 2 0.002…0.006 in² (1…4 mm²)flexible without cable end screw clamp terminals 1 0.002…0.006 in² (1…4 mm²)flexible with cable end screw clamp terminals 2 0.002…0.004 in² (1…2.5 mm²)flexible with cable end screw clamp terminals 1 0.002…0.006 in² (1…4 mm²)solid without cable end screw clamp terminals 2 0.002…0.006 in² (1…4 mm²)solid without cable end
Tightening torque	15.05 lbf.in (1.7 N.m) screw clamp terminals Philips No 2 15.05 lbf.in (1.7 N.m) screw clamp terminals flat Ø 6 mm 15.05 lbf.in (1.7 N.m) screw clamp terminals pozidriv No 2
Control circuit voltage limits	0.3...0.6 Uc (-40…158 °F (-40…70 °C)):drop-out AC 50/60 Hz 0.8...1.1 Uc (-40…140 °F (-40…60 °C)):operational AC 50 Hz 0.85...1.1 Uc (-40…140 °F (-40…60 °C)):operational AC 60 Hz 1...1.1 Uc (140…158 °F (60…70 °C)):operational AC 50/60 Hz

Price is “List Price” and may be subject to a trade discount – check with your local distributor or retailer for actual price.

Disclaimer: This documentation is not intended as a substitute for and is not to be used for determining suitability or reliability of these products for specific user applications

Operating time	12...22 ms coil energisation and NO closing 4...12 ms coil de-energisation and NO opening
Mechanical durability	30 Mcycles
Maximum operating rate	180 cyc/mn
Inrush power in VA	70 VA 50 Hz (at 68 °F (20 °C))
Hold-in power consumption in VA	8 VA 50 Hz (at 68 °F (20 °C))
Minimum switching voltage	17 V
Minimum switching current	5 mA
Non-overlap time	1.5 ms on energisation between NC and NO contact 1.5 ms on de-energisation between NC and NO contact
Insulation resistance	> 10 MOhm
Mechanical robustness	Shocks control relay open10 Gn for 11 ms IEC 60068-2-27 Shocks control relay closed15 Gn for 11 ms IEC 60068-2-27 Vibrations control relay open2 Gn, 5...300 Hz IEC 60068-2-6 Vibrations control relay closed4 Gn, 5...300 Hz IEC 60068-2-6
Height	3.03 in (77 mm)
Width	1.8 in (45 mm)
Depth	3.3 in (84 mm)
Product Weight	1.28 lb(US) (0.58 kg)

Environment

Standards	EN/IEC 60947-5-1 GB/T 14048.5 UL 60947-5-1 CSA C22.2 No 60947-5-1 JIS C8201-5-1
Product Certifications	CB CCC UL CSA EAC CE UKCA
IP degree of protection	IP2X front face VDE 0106
Protective treatment	TH IEC 60068
Ambient air temperature for operation	-40…140 °F (-40…60 °C) 140…158 °F (60…70 °C) with derating
Ambient Air Temperature for Storage	-76…176 °F (-60…80 °C)
Operating altitude	0...9842.52 ft (0...3000 m)

Ordering and shipping details

Category	US10I1222371
Discount Schedule	0I12
GTIN	3389110403091
Returnability	Yes
Country of origin	ID

Packing Units

Unit Type of Package 1	PCE

Nbr. of units in pkg.	1
Package 1 Height	1.969 in (5.000 cm)
Package 1 Width	3.622 in (9.200 cm)
Package 1 Length	4.449 in (11.300 cm)
Package weight(Lbs)	12.346 oz (350.000 g)
Unit Type of Package 2	S02
Number of Units in Package 2	20
Package 2 Height	5.906 in (15.000 cm)
Package 2 Width	11.811 in (30.000 cm)
Package 2 Length	15.748 in (40.000 cm)
Package 2 Weight	16.435 lb(US) (7.455 kg)
Unit Type of Package 3	P06
Number of Units in Package 3	320
Package 3 Height	30.315 in (77.000 cm)
Package 3 Width	31.496 in (80.000 cm)
Package 3 Length	23.622 in (60.000 cm)
Package 3 Weight	281.707 lb(US) (127.780 kg)

Contractual warranty

Warranty (in months)	18

Environmental Data

Schneider Electric aims to achieve Net Zero status by 2050 through supply chain partnerships, lower impact materials, and circularity via our ongoing “Use Better, Use Longer, Use Again” campaign to extend product lifetimes and recyclability.

Environmental Data explained >

How we assess product sustainability >

Environmental footprint

Total lifecycle Carbon footprint	**18 kg CO2 eq.**
Carbon footprint of the manufacturing phase [A1 to A3]	**2 kg CO2 eq.**
Carbon footprint of the distribution phase [A4]	**0.3 kg CO2 eq.**
Carbon footprint of the installation phase [A5]	**0.1 kg CO2 eq.**
Carbon footprint of the use phase [B2, B3, B4, B6]	**15 kg CO2 eq.**
Environmental Disclosure	**Product Environmental Profile**

Use Better

Materials and Substances

Packaging made with recycled cardboard	**Yes**
Packaging without single use plastic	**Yes**
SCIP Number	**B67ac941-f42f-4afd-894a-0b6f9cefde62**
EU RoHS Directive	**Compliant By Exemption**
REACh Regulation	**Reference contains Substances of Very High Concern above the threshold**
California proposition 65	**WARNING: This product can expose you to chemicals including: Antimony oxide & Antimony trioxide, which is known to the State of California to cause cancer. For more information go to www.P65Warnings.ca.gov**

Use Longer

Lifetime extension

Repair	**No**

Use Again

Repack and remanufacture

Recyclability potential, in %	**66**
Circularity Profile	**End of Life Information**
Take-back	**No**
WEEE Label	**The product must be disposed on European Union markets following specific waste collection and never end up in rubbish bins.**

Offer Marketing Illustration

Product benefits / Features



Offer Marketing Illustration

Product benefits / Features



Image of product / Alternate images

Alternative



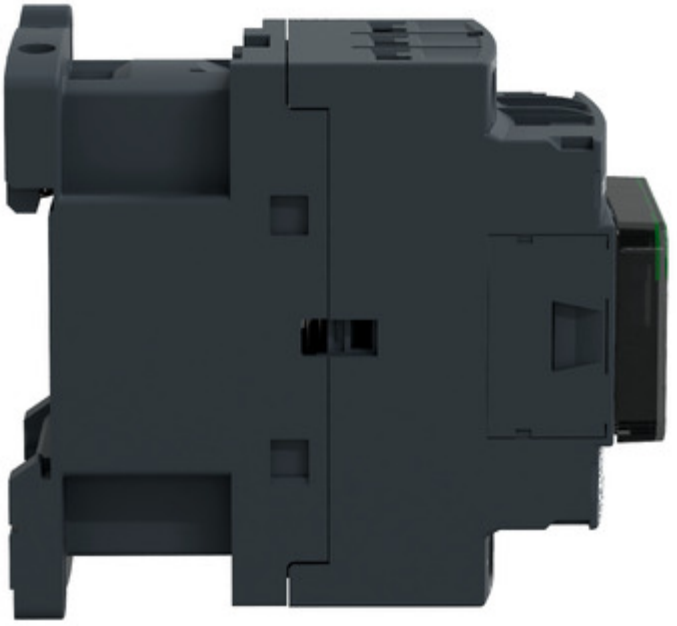


Schneider
telemecanique