Product data sheet

Specifications

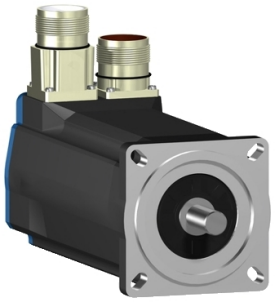

servo motor BSH, Lexium 05, 2.12N.m, 6000rpm, 70mm, keyed shaft, Sincos single turn, without brake, IP65

BSH0702T31A2A

Product availability: Non-Stock - Not normally stocked in distribution facility

Main

Device short name	BSH
Product or Component Type	Servo motor
Maximum mechanical speed	8000 rpm
Continuous stall torque	19.5 lbf.in (2.2 N.m) LXM32.D30M2 10 A, 115 V, single phase 18.76 lbf.in (2.12 N.m) LXM05AD17M2, 200...240 V, single phase 18.76 lbf.in (2.12 N.m) LXM05BD17M2, 200...240 V, single phase 18.76 lbf.in (2.12 N.m) LXM05CD17M2, 200...240 V, single phase 19.5 lbf.in (2.2 N.m) LXM32.D18M2 6 A, 230 V, single phase 18.76 lbf.in (2.12 N.m) LXM05AD17F1, 110...120 V, single phase 18.76 lbf.in (2.12 N.m) LXM05AD28M2, 200...240 V, single phase 18.76 lbf.in (2.12 N.m) LXM05BD17F1, 110...120 V, single phase 18.76 lbf.in (2.12 N.m) LXM05BD28M2, 200...240 V, single phase 18.76 lbf.in (2.12 N.m) LXM05CD17F1, 110...120 V, single phase 18.76 lbf.in (2.12 N.m) LXM05CD28M2, 200...240 V, single phase 18.76 lbf.in (2.12 N.m) LXM15LD17N4 6 A, 230 V, three phase 18.76 lbf.in (2.12 N.m) LXM15LD21M3, 230 V, three phase 18.76 lbf.in (2.12 N.m) LXM05AD42M3X, 200...240 V, three phase 18.76 lbf.in (2.12 N.m) LXM05BD42M3X, 200...240 V, three phase 18.76 lbf.in (2.12 N.m) LXM05CD42M3X, 200...240 V, three phase
Peak stall torque	54.0 lbf.in (6.1 N.m) LXM32.D30M2 10 A, 115 V, single phase 63.7 lbf.in (7.2 N.m) LXM32.D18M2 6 A, 230 V, single phase 36.64 lbf.in (4.14 N.m) LXM05AD17F1, 110...120 V, single phase 36.64 lbf.in (4.14 N.m) LXM05AD17M2, 200...240 V, single phase 36.64 lbf.in (4.14 N.m) LXM05BD17F1, 110...120 V, single phase 36.64 lbf.in (4.14 N.m) LXM05BD17M2, 200...240 V, single phase 36.64 lbf.in (4.14 N.m) LXM05CD17F1, 110...120 V, single phase 36.64 lbf.in (4.14 N.m) LXM05CD17M2, 200...240 V, single phase 60.2 lbf.in (6.8 N.m) LXM05AD28M2 6 A, 200...240 V, single phase 60.2 lbf.in (6.8 N.m) LXM05BD28M2, 200...240 V, single phase 60.2 lbf.in (6.8 N.m) LXM05CD28M2, 200...240 V, single phase 39.56 lbf.in (4.47 N.m) LXM15LD17N4, 230 V, three phase 48.24 lbf.in (5.45 N.m) LXM15LD21M3, 230 V, three phase 60.2 lbf.in (6.8 N.m) LXM05AD42M3X, 200...240 V, three phase 60.2 lbf.in (6.8 N.m) LXM05BD42M3X, 200...240 V, three phase 60.2 lbf.in (6.8 N.m) LXM05CD42M3X, 200...240 V, three phase
Nominal output power	550 W LXM32.D30M2 10 A, 115 V, single phase 600 W LXM05AD17M2, 200...240 V, single phase 600 W LXM05BD17M2 6 A, 200...240 V, single phase 600 W LXM05CD17M2, 200...240 V, single phase 570 W LXM05AD17F1, 110...120 V, single phase 570 W LXM05BD17F1, 110...120 V, single phase 570 W LXM05CD17F1, 110...120 V, single phase 600 W LXM05AD28M2, 200...240 V, single phase 600 W LXM05BD28M2, 200...240 V, single phase 600 W LXM05CD28M2, 200...240 V, single phase 950 W LXM32.D18M2 6 A, 230 V, single phase 1000 W LXM15LD17N4, 230 V, three phase 1000 W LXM15LD21M3, 230 V, three phase 600 W LXM05AD42M3X, 200...240 V, three phase 600 W LXM05BD42M3X, 200...240 V, three phase 600 W LXM05CD42M3X, 200...240 V, three phase

Price is “List Price” and may be subject to a trade discount – check with your local distributor or retailer for actual price.

Disclaimer: This documentation is not intended as a substitute for and is not to be used for determining suitability or reliability of these products for specific user applications

Nominal torque	18.32 lbf.in (2.07 N.m) LXM32.D30M2 10 A, 115 V, single phase 16.8 lbf.in (1.9 N.m) LXM05AD17M2, 200...240 V, single phase 16.8 lbf.in (1.9 N.m) LXM05BD17M2 6 A, 200...240 V, single phase 16.8 lbf.in (1.9 N.m) LXM05CD17M2, 200...240 V, single phase 16.20 lbf.in (1.83 N.m) LXM05AD17F1, 110...120 V, single phase 16.20 lbf.in (1.83 N.m) LXM05BD17F1, 110...120 V, single phase 16.20 lbf.in (1.83 N.m) LXM05CD17F1, 110...120 V, single phase 16.8 lbf.in (1.9 N.m) LXM05AD28M2, 200...240 V, single phase 16.8 lbf.in (1.9 N.m) LXM05BD28M2, 200...240 V, single phase 16.8 lbf.in (1.9 N.m) LXM05CD28M2, 200...240 V, single phase 15.9 lbf.in (1.8 N.m) LXM32.D18M2 6 A, 230 V, single phase 14.69 lbf.in (1.66 N.m) LXM15LD17N4, 230 V, three phase 14.69 lbf.in (1.66 N.m) LXM15LD21M3, 230 V, three phase 16.8 lbf.in (1.9 N.m) LXM05AD42M3X, 200...240 V, three phase 16.8 lbf.in (1.9 N.m) LXM05BD42M3X, 200...240 V, three phase 16.8 lbf.in (1.9 N.m) LXM05CD42M3X, 200...240 V, three phase
Nominal speed	2500 rpm LXM32.D30M2 10 A, 115 V, single phase 3000 rpm LXM05AD17F1, 110...120 V, single phase 3000 rpm LXM05BD17F1 6 A, 110...120 V, single phase 3000 rpm LXM05CD17F1, 110...120 V, single phase 3000 rpm LXM05AD17M2, 200...240 V, single phase 3000 rpm LXM05BD17M2, 200...240 V, single phase 3000 rpm LXM05CD17M2, 200...240 V, single phase 3000 rpm LXM05AD28M2, 200...240 V, single phase 3000 rpm LXM05BD28M2, 200...240 V, single phase 3000 rpm LXM05CD28M2, 200...240 V, single phase 5000 rpm LXM32.D18M2 6 A, 230 V, single phase 3000 rpm LXM05AD42M3X, 200...240 V, three phase 3000 rpm LXM05BD42M3X, 200...240 V, three phase 3000 rpm LXM05CD42M3X, 200...240 V, three phase 6000 rpm LXM15LD17N4, 230 V, three phase 6000 rpm LXM15LD21M3, 230 V, three phase
Product compatibility	LXM05AD17F1 110...120 V single phase LXM05AD17M2 200...240 V single phase LXM05AD28M2 200...240 V single phase LXM05BD17F1 110...120 V single phase LXM05BD17M2 200...240 V single phase LXM05BD28M2 200...240 V single phase LXM05CD17F1 110...120 V single phase LXM05CD17M2 200...240 V single phase LXM05CD28M2 200...240 V single phase LXM32.D30M2 115 V single phase LXM32.D18M2 230 V single phase LXM15LD21M3 230 V three phase LXM05AD42M3X 200...240 V three phase LXM05BD42M3X 200...240 V three phase LXM05CD42M3X 200...240 V three phase LXM15LD17N4 230 V three phase
Shaft end	Keyed
IP Degree of Protection	IP65 standard IP67 with IP67 kit
Speed feedback resolution	131072 points/turn
Holding brake	Without
Mounting Support	International standard flange
Electrical Connection	Rotatable right-angled connectors

Complementary

Range Compatibility	Lexium 32 Lexium 05 Lexium 15
supply voltage max	480 V
Phase	Three phase
Continuous stall current	4.9 A
maximum continuous power	1.51 W

Maximum current Irms	20.6 A LXM15LD21M3 20.6 A LXM15LD17N4 19.9 A LXM05AD17F1 19.9 A LXM05AD17M2 19.9 A LXM05AD28M2 19.9 A LXM05AD42M3X 19.9 A LXM05BD17F1 19.9 A LXM05BD17M2 19.9 A LXM05BD28M2 19.9 A LXM05BD42M3X 19.9 A LXM05CD17F1 19.9 A LXM05CD17M2 19.9 A LXM05CD28M2 19.9 A LXM05CD42M3X 15 A LXM32.D30M2 18 A LXM32.D18M2
Maximum permanent current	19.9 A
Switching frequency	8 kHz
Second shaft	Without second shaft end
Shaft diameter	0.4 in (11 mm)
Shaft length	0.9 in (23 mm)
Key width	0.7 in (18 mm)
Feedback type	Single turn SinCos Hiperface
Motor flange size	2.8 in (70 mm)
Number of motor stacks	2
Torque constant	0.45 N.m/A 248 °F (120 °C)
Back emf constant	28 V/krpm 248 °F (120 °C)
Number of motor poles	3.0
Rotor inertia	0.41 kg.cm²
Stator resistance	1.5 Ohm 68 °F (20 °C)
Stator inductance	3.75 mH 68 °F (20 °C)
Stator electrical time constant	4.47 ms 68 °F (20 °C)
Maximum radial force Fr	390 N 6000 rpm 410 N 5000 rpm 450 N 4000 rpm 490 N 3000 rpm 560 N 2000 rpm 710 N 1000 rpm
Maximum axial force Fa	0.2 x Fr
Type of cooling	Natural convection
Length	7.4 in (187 mm)
Centring collar diameter	2.4 in (60 mm)
Centring collar depth	0.10 in (2.5 mm)
Number of mounting holes	4
Mounting holes diameter	0.2 in (5.5 mm)
Circle diameter of the mounting holes	3.2 in (82 mm)
Product Weight	6.37 lb(US) (2.89 kg)
Sizing reference	BSH0702T
Network number of phases	3
Accuracy error [angular]	1.4 °

Temperature copper hot	248 °F (120 °C)
Temperature magnet hot	212 °F (100 °C)
Temperature magnet rt	68 °F (20 °C)
Output current 3s peak	19.9 A
Inertia	0.0 kg.cm² of brake 0.41 kg.cm² of motor

Ordering and shipping details

Category	US1PC5318282
Discount Schedule	PC53
GTIN	3389118136731
Returnability	No
Country of origin	DE

Packing Units

Unit Type of Package 1	PCE
Nbr. of units in pkg.	1
Package 1 Height	4.8 in (12.3 cm)
Package 1 Width	5.04 in (12.8 cm)
Package 1 Length	14.8 in (37.7 cm)
Package weight(Lbs)	6.2 lb(US) (2.8 kg)

Contractual warranty

Warranty (in months)	18

Environmental Data

Schneider Electric aims to achieve Net Zero status by 2050 through supply chain partnerships, lower impact materials, and circularity via our ongoing “Use Better, Use Longer, Use Again” campaign to extend product lifetimes and recyclability.

Environmental Data explained >

How we assess product sustainability >

Environmental footprint

Total lifecycle Carbon footprint	**1 103 kg CO2 eq.**
Carbon footprint of the manufacturing phase [A1 to A3]	**12 kg CO2 eq.**
Carbon footprint of the distribution phase [A4]	**0.4 kg CO2 eq.**
Carbon footprint of the installation phase [A5]	**0 kg CO2 eq.**
Carbon footprint of the use phase [B2, B3, B4, B6]	**1 090 kg CO2 eq.**
Carbon footprint of the end-of-life phase [C1 to C4]	**0.3 kg CO2 eq.**

Use Better

Materials and Substances

Packaging made with recycled cardboard	**Yes**
Packaging without single use plastic	**No**
SCIP Number	**8c11b0c9-e501-4810-83eb-05fc6605ede4**
EU RoHS Directive	**Compliant By Exemption**
REACh Regulation	**Reference contains Substances of Very High Concern above the threshold**
California proposition 65	**WARNING: This product can expose you to chemicals including: Lead and lead compounds, which is known to the State of California to cause cancer and birth defects or other reproductive harm. For more information go to www.P65Warnings.ca.gov**
PVC free	**Yes**

Use Longer

Lifetime extension

Repair	**No**

Use Again

Repack and remanufacture

Circularity Profile	**No need of specific recycling operations**
Take-back	**No**
WEEE Label	**The product must be disposed on European Union markets following specific waste collection and never end up in rubbish bins.**

Dimensions Drawings

Servo Motors Dimensions

Example with Straight Connectors

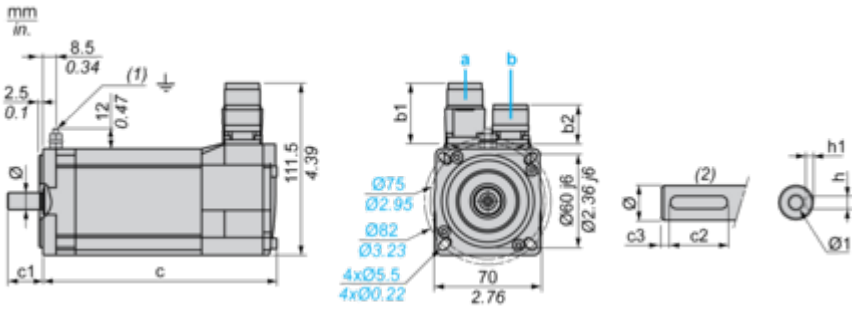

a: Power supply for servo motor brake
b: Power supply for servo motor encoder
(1) M4 screw
(2) Shaft end, keyed slot (optional)

Dimensions in mm

Straight connectors		Rotatable angled connectors		c (without brake)	c (with brake)	c1	c2	c3	h	h1	Ø	Ø1 for screws
b1	b2	b1	b2									
39.5	25.5	39.5	39.5	187	213	23	18	2.5	4 N9	$2.5^{+0.1}_{0}$	11 k6	M4 x 10

Dimensions in in.

Straight connectors		Rotatable angled connectors		c (without brake)	c (with brake)	c1	c2	c3	h	h1	Ø	Ø1 for screws
b1	b2	b1	b2									
1.55	1.00	1.55	1.55	7.36	8.38	0.90	0.70	0.09	0.16 N9	$0.01^{+0.004}_{0}$	0.43 k6	M4 x 0.39

Performance Curves

115 V Single-Phase Supply Voltage

Torque/Speed Curves

Servo motor with LXM32•D30M2 servo drive

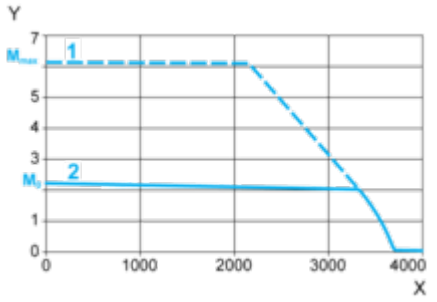

X Speed in rpm
Y Torque in Nm
1 Peak torque
2 Continuous torque

230 V Single-Phase Supply Voltage

Torque/Speed Curves

Servo motor with LXM32•D18M2 servo drive

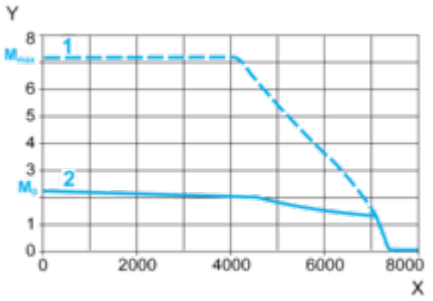

X Speed in rpm
Y Torque in Nm
1 Peak torque
2 Continuous torque