# Product data sheet

Specifications



## servo motor BMH, Lexium 32, 3.4Nm, 8000rpm, keyed shaft, without brake, IP54, 16bit encoder, 3 phases

BMH0703P16A2A

**Product availability: Stock - Normally stocked in distribution facility**

## Main

| | |
|---|---|
| **Device short name** | BMH |
| **Product or Component Type** | Servo motor |
| **Maximum mechanical speed** | 8000 rpm |
| **Continuous stall torque** | 30.09 lbf.in (3.4 N.m) LXM32.D18N4 6 A, 400 V, three phase<br>30.09 lbf.in (3.4 N.m) LXM32.D18N4 6 A, 480 V, three phase |
| **Peak stall torque** | 90.3 lbf.in (10.2 N.m) LXM32.D18N4 6 A, 400 V, three phase<br>90.3 lbf.in (10.2 N.m) LXM32.D18N4 6 A, 480 V, three phase |
| **Nominal output power** | 1300 W LXM32.D18N4 6 A, 400 V, three phase<br>1300 W LXM32.D18N4 6 A, 480 V, three phase |
| **Nominal torque** | 21.2 lbf.in (2.4 N.m) LXM32.D18N4 6 A, 400 V, three phase<br>21.2 lbf.in (2.4 N.m) LXM32.D18N4 6 A, 480 V, three phase |
| **Nominal speed** | 5000 rpm LXM32.D18N4 6 A, 400 V, three phase<br>5000 rpm LXM32.D18N4 6 A, 480 V, three phase |
| **Product compatibility** | LXM32.D18N4 400...480 V three phase |
| **Shaft end** | Keyed |
| **IP Degree of Protection** | IP54 standard |
| **Speed feedback resolution** | 32768 points/turn |
| **Holding brake** | Without |
| **Mounting Support** | International standard flange |
| **Electrical Connection** | Rotatable right-angled connectors |

## Complementary

| | |
|---|---|
| **Range Compatibility** | Lexium 32 |
| **[Us] rated supply voltage** | 480 V |
| **Phase** | Three phase |
| **Continuous stall current** | 3.91 A |
| **Continuous power** | 1.68 W |
| **Maximum current Irms** | 12.57 A LXM32.D18N4 |
| **Maximum permanent current** | 12.57 A |
| **Second shaft** | Without second shaft end |
| **Shaft diameter** | 0.6 in (14 mm) |
| **Shaft length** | 1.2 in (30 mm) |
| **Key width** | 0.8 in (20 mm) |

Price is “List Price” and may be subject to a trade discount – check with your local distributor or retailer for actual price.

Disclaimer: This documentation is not intended as a substitute for and is not to be used for determining suitability or reliability of these products for specific user applications

| | |
|---|---|
| **Feedback type** | Single turn SinCos Hiperface |
| **Motor flange size** | 2.8 in (70 mm) |
| **Number of motor stacks** | 3 |
| **Torque constant** | 0.87 N.m/A 248 °F (120 °C) |
| **Back emf constant** | 55.8 V/krpm 248 °F (120 °C) |
| **Number of motor poles** | 5.0 |
| **Rotor inertia** | 1.67 kg.cm² |
| **Stator resistance** | 2.65 Ohm 68 °F (20 °C) |
| **Stator inductance** | 4.175 mH 68 °F (20 °C) |
| **Stator electrical time constant** | 3.2 ms 68 °F (20 °C) |
| **Maximum radial force Fr** | 730 N 1000 rpm<br>580 N 2000 rpm<br>510 N 3000 rpm<br>460 N 4000 rpm<br>430 N 5000 rpm<br>400 N 6000 rpm |
| **Maximum axial force Fa** | 0.2 x Fr |
| **Type of cooling** | Natural convection |
| **Length** | 7.3 in (186 mm) |
| **Centring collar diameter** | 2.4 in (60 mm) |
| **Centring collar depth** | 0.10 in (2.5 mm) |
| **Number of mounting holes** | 4 |
| **Mounting holes diameter** | 0.2 in (5.5 mm) |
| **Circle diameter of the mounting holes** | 3.2 in (82 mm) |
| **Product Weight** | 6.6 lb(US) (3 kg) |
| **Sizing reference** | BMH0703P |
| **Network number of phases** | 3 |
| **Accuracy error [angular]** | 4.8 ° |
| **Temperature copper hot** | 275 °F (135 °C) |
| **Temperature magnet hot** | 212 °F (100 °C) |
| **Temperature magnet rt** | 68 °F (20 °C) |
| **Output current 3s peak** | 12.57 A |
| **Inertia** | 0.0 kg.cm² of brake<br>1.674 kg.cm² of motor |

## Ordering and shipping details

| | |
|---|---|
| **Category** | US1PC5318282 |
| **Discount Schedule** | PC53 |
| **GTIN** | 3606485199443 |
| **Returnability** | Yes |
| **Country of origin** | DE |

## Packing Units

| | |
|---|---|
| **Unit Type of Package 1** | PCE |

| | |
|---|---|
| **Nbr. of units in pkg.** | 1 |
| **Package 1 Height** | 4.331 in (11.000 cm) |
| **Package 1 Width** | 7.362 in (18.700 cm) |
| **Package 1 Length** | 15.551 in (39.500 cm) |
| **Package weight(Lbs)** | 7.972 lb(US) (3.616 kg) |
| **Unit Type of Package 2** | P06 |
| **Number of Units in Package 2** | 12 |
| **Package 2 Height** | 29.528 in (75.000 cm) |
| **Package 2 Width** | 23.622 in (60.000 cm) |
| **Package 2 Length** | 31.496 in (80.000 cm) |
| **Package 2 Weight** | 114.420 lb(US) (51.900 kg) |

## Contractual warranty

| | |
|---|---|
| **Warranty (in months)** | 18 |

## Environmental Data

Schneider Electric aims to achieve Net Zero status by 2050 through supply chain partnerships, lower impact materials, and circularity via our ongoing “Use Better, Use Longer, Use Again” campaign to extend product lifetimes and recyclability.

Environmental Data explained >

How we assess product sustainability >

### Environmental footprint

| | |
|---|---|
| Total lifecycle Carbon footprint | **1 435 kg CO2 eq.** |
| Carbon footprint of the manufacturing phase [A1 to A3] | **26 kg CO2 eq.** |
| Carbon footprint of the distribution phase [A4] | **0.5 kg CO2 eq.** |
| Carbon footprint of the installation phase [A5] | **0 kg CO2 eq.** |
| Carbon footprint of the use phase [B2, B3, B4, B6] | **1 408 kg CO2 eq.** |
| Carbon footprint of the end-of-life phase [C1 to C4] | **0.3 kg CO2 eq.** |

## Use Better

### Materials and Substances

| | |
|---|---|
| Packaging made with recycled cardboard | **Yes** |
| Packaging without single use plastic | **Yes** |
| SCIP Number | **A7df881f-135f-4256-b8c2-ea55d4c9a151** |
| EU RoHS Directive | **Compliant By Exemption** |
| REACh Regulation | **Reference contains Substances of Very High Concern above the threshold** |
| California proposition 65 | **WARNING: This product can expose you to chemicals including: Lead and lead compounds, which is known to the State of California to cause cancer and birth defects or other reproductive harm. For more information go to www.P65Warnings.ca.gov** |
| PVC free | **Yes** |

## Use Longer

### Lifetime extension

| | |
|---|---|
| Repair | **No** |

## Use Again

### Repack and remanufacture

| | |
|---|---|
| Circularity Profile | **No need of specific recycling operations** |
| Take-back | **No** |
| WEEE Label | **The product must be disposed on European Union markets following specific waste collection and never end up in rubbish bins.** |

## Dimensions Drawings

### Servo Motors Dimensions

#### Example with Straight Connectors

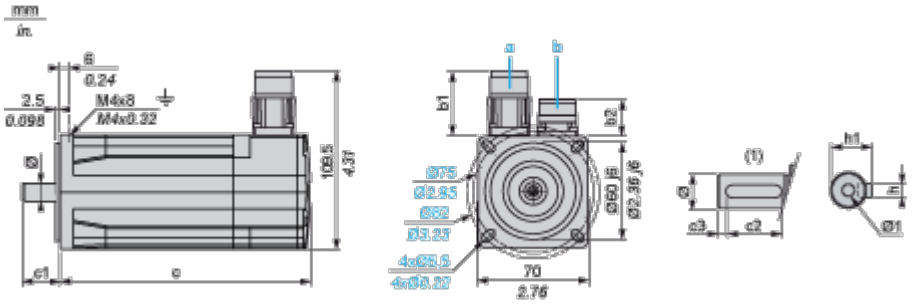


a: Power supply for servo motor brake

b: Power supply for servo motor encoder

(1) Shaft end, keyed slot (optional)

Dimensions in mm

| Straight connectors | | Rotatable angled connectors | | c (without brake) | c (with brake) | c1 | c2 | c3 | h | h1 | Ø | Ø1 for screws |
|---|---|---|---|---|---|---|---|---|---|---|---|---|
| b1 | b2 | b1 | b2 | | | | | | | | | |
| 39.5 | 25.5 | 39.5 | 39.5 | 186 | 225 | 30 | 20 | 5 | 5 h9 | $16^{+0}_{-0.13}$ | 14 k6 | M5 x 17 |

Dimensions in in.

| Straight connectors | | Rotatable angled connectors | | c (without brake) | c (with brake) | c1 | c2 | c3 | h | h1 | Ø | Ø1 for screws |
|---|---|---|---|---|---|---|---|---|---|---|---|---|
| b1 | b2 | b1 | b2 | | | | | | | | | |
| 1.55 | 1 | 1.55 | 1.55 | 7.32 | 8.85 | 1.18 | 0.78 | 0.19 | 0.20 h9 | $0.63^{+0}_{-0.0051}$ | 0.55 k6 | M5 x 0.67 |

## Performance Curves

### 400 V 3-Phase Supply Voltage

#### Torque/Speed Curves

**Servo motor with LXM32•D18N4 servo drive**

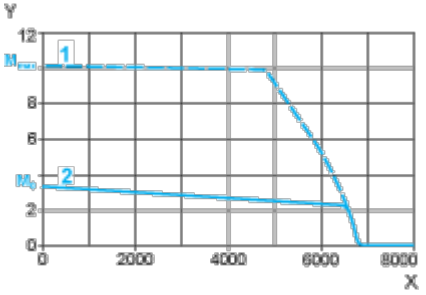


X Speed in rpm

Y Torque in Nm

1 Peak torque

2 Continuous torque

## 480 V 3-Phase Supply Voltage

### Torque/Speed Curves

**Servo motor with LXM32•D18N4 servo drive**

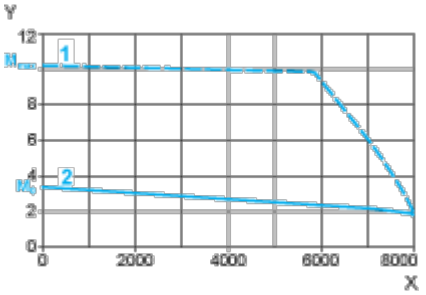


X Speed in rpm

Y Torque in Nm

1 Peak torque

2 Continuous torque