Product data sheet

Specifications



Discrete output module, Modicon X80, 32 transistor outputs, 12/24V DC

BMXDDO3202

Product availability: Stock - Normally stocked in distribution facility

Main

Range of Product	Modicon X80
Product or Component Type	Discrete output module
Discrete output logic	Positive

Complementary

Response time on output	0.3 ms
Maximum voltage drop	<1.2 V at state 1
Insulation resistance	> 10 MOhm 500 V DC
Current per channel	0.55 A
Maximum current per module	17.6 A
Paralleling of outputs	Yes : 3 maximum
Switching frequency	0.5/LI² Hz
Load impedance ohmic	> 54.54 Ohm
Reverse polarity protection	Reverse mounted diode
MTBF reliability	833000 H
Protection type	External fuse reverse polarity protection short-circuit protection overload protection overvoltage protection
Voltage detection threshold	< 14 V DC preactuator fault > 18 V DC preactuator at state 0
Product Weight	5.009 oz (142.01 g)

Environment

IP Degree of Protection	IP20
Protective treatment	Standard version
Directives	2014/35/EU - low voltage directive 2014/30/EU - electromagnetic compatibility
Dielectric strength	1780 V AC 50/60 Hz 1 minute, output/ground 1 minute, output/internal logic
Relative humidity	5…95 % 131 °F (55 °C) without condensation

Ordering and shipping details

Category	US1PC3418160
Discount Schedule	PC34

Price is “List Price” and may be subject to a trade discount – check with your local distributor or retailer for actual price.

Disclaimer: This documentation is not intended as a substitute for and is not to be used for determining suitability or reliability of these products for specific user applications

GTIN	3606482177963
Returnability	Yes
Country of origin	ID

Packing Units

Unit Type of Package 1	PCE
Nbr. of units in pkg.	1
Package 1 Height	2.362 in (6.000 cm)
Package 1 Width	7.087 in (18.000 cm)
Package 1 Length	10.433 in (26.500 cm)
Package weight(Lbs)	10.758 oz (305.000 g)
Unit Type of Package 2	S03
Number of Units in Package 2	10
Package 2 Height	11.811 in (30.000 cm)
Package 2 Width	11.811 in (30.000 cm)
Package 2 Length	15.748 in (40.000 cm)
Package 2 Weight	8.616 lb(US) (3.908 kg)

Contractual warranty

Warranty (in months)	18

Environmental Data

Schneider Electric aims to achieve Net Zero status by 2050 through supply chain partnerships, lower impact materials, and circularity via our ongoing “Use Better, Use Longer, Use Again” campaign to extend product lifetimes and recyclability.

Environmental Data explained >

How we assess product sustainability >

Environmental footprint

Total lifecycle Carbon footprint	**32 kg CO2 eq.**
Carbon footprint of the manufacturing phase [A1 to A3]	**18 kg CO2 eq.**
Carbon footprint of the distribution phase [A4]	**0 kg CO2 eq.**
Carbon footprint of the installation phase [A5]	**0.3 kg CO2 eq.**
Carbon footprint of the use phase [B2, B3, B4, B6]	**14 kg CO2 eq.**
Carbon footprint of the end-of-life phase [C1 to C4]	**0.4 kg CO2 eq.**
Environmental Disclosure	**Product Environmental Profile**

Use Better

Materials and Substances

Packaging made with recycled cardboard	**Yes**
Packaging without single use plastic	**Yes**
EU RoHS Directive	**Compliant By Exemption**
REACh Regulation	**Reference contains Substances of Very High Concern above the threshold**

Use Longer

Lifetime extension

Repair	**No**

Use Again

Repack and remanufacture

Recyclability potential, in %	**0**
Circularity Profile	**End of Life Information**
Take-back	**No**

Dimensions Drawings

Modules Mounted on Racks

Dimensions

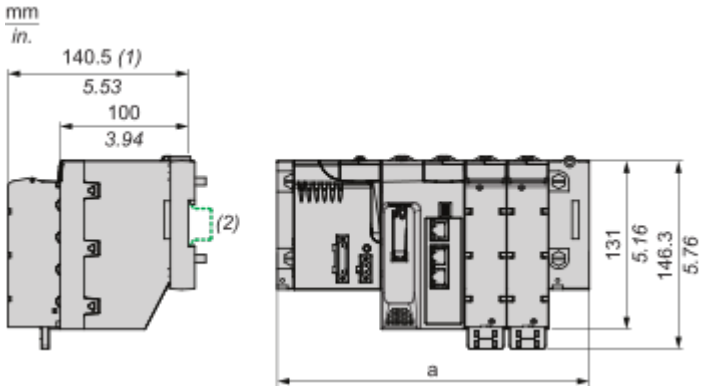

(1) With removable terminal block (cage, screw or spring).
(2) On AM1 ED rail: 35 mm wide, 15 mm deep.

Rack references	a in mm	a in in.
BMXXBP0400 and BMXXBP0400H	242.4	9.54
BMXXBP0600 and BMXXBP0600H	307.6	12.11
BMXXBP0800 and BMXXBP0800H	372.8	14.68
BMXXBP1200and BMXXBP1200H	503.2	19.81
BMEXBP0400 and BMEXBP0400H	242.4	9.54
BMEXBP0800 and BMEXBP0800H	372.8	14.68
BMEXBP1200 and BMEXBP1200H	503.2	19.81
BMEXBP0602 and BMEXBP0602H	375.8	14.8
BMEXBP1002 and BMEXBP1002H	506.2	19.93

Connections and Schema

Connecting the Module

Output Circuit Diagram

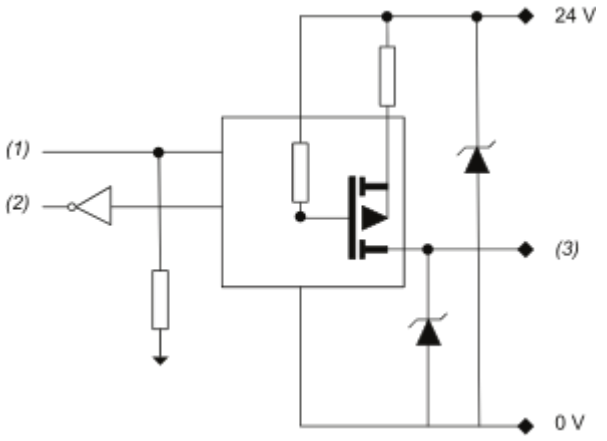

(1) Command
(2) Detected Error
(3) Output

Module Connection

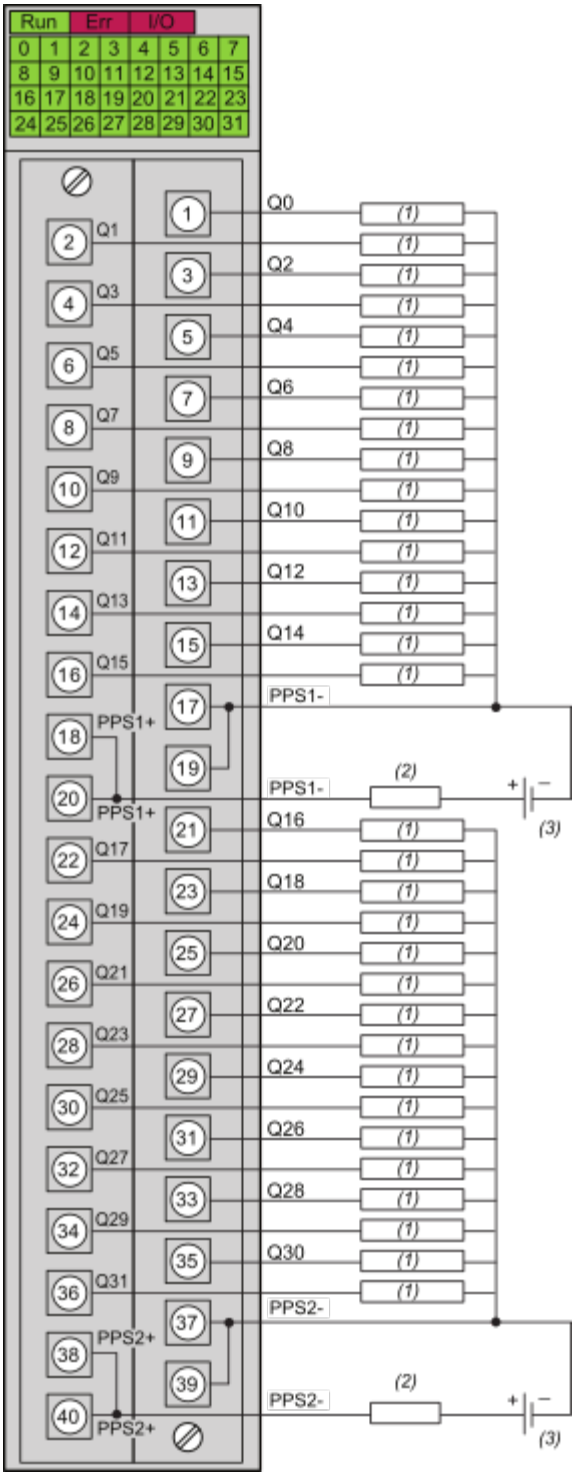

(1) Pre-actuator
(2) Fast blow fuse for each 16-channel group. The fuse rating adjusted according to the load
(3) Pre-actuator power supply (PPSn) 12 VDC/24 VDC

Image of product / Alternate images

Alternative










Schneider
Electric
Modicon
BMXDDO3202
DIG 32Q 12/24VDC
TRANS SOURCE 0.5A TB
DOM : XXXX


SN:XXXXXXXXXXX
PV:XX
RL:XX