Product data sheet

Specifications



Regulated Power Supply, 100 to 240V AC, 12V, 10A, single phase, Optimized

ABLS1A12100

Product availability: Stock - Normally stocked in distribution facility

Main

Range of Product	Modicon Power Supply
Product or Component Type	Power supply
Power supply type	Regulated switch mode
Variant option	Optimized
Enclosure Material	Aluminum
Nominal input voltage	100...240 V AC single phase 100...240 V AC phase to phase 140...340 V DC
Rated power in W	120 W
Output voltage	12 V DC
Power supply output current	10 A

Complementary

Efficiency at full load	85...264 V AC without temperature derating 120...375 V DC without temperature derating
Nominal network frequency	50…60 Hz
Network system compatibility	TN TT IT
Maximum leakage current	1 mA 240 V AC
Input protection type	Integrated fuse (not interchangeable) 4 A External protection (recommended) 20 A Curve C External protection (recommended) 13 A Curve C
Inrush current	30.0 A 115 V 60.0 A 230 V
Power factor	0.55 at 115 V AC 0.45 at 230 V AC
Efficiency	84 % 115 V AC 86 % 230 V AC
Output voltage adjustment	11...14 V
Power dissipation in W	25 W
Current consumption	< 2.5 A 115 V AC < 1.4 A 230 V AC < 1.3 A 140 V DC
Turn-on time	< 1 s
Holding time	> 20 ms 115 V AC > 40 ms 230 V AC
Startup with capacitive loads	8000 µF

Price is “List Price” and may be subject to a trade discount – check with your local distributor or retailer for actual price.

Disclaimer: This documentation is not intended as a substitute for and is not to be used for determining suitability or reliability of these products for specific user applications

Residual ripple	< 120 mV
Meantime between failure [MTBF]	700000 h at 77 °F (25 °C), full load conforming to SR 332
Output protection type	Against overload and short-circuits, protection technology: automatic reset Against over temperature, protection technology: manual reset Against overvoltage, protection technology: manual reset
Connections - terminals	Screw connection 0.5...4 mm², AWG 20...AWG 12) without wire end ferrule output Screw connection 0.5...2.5 mm², AWG 20...AWG 14) with wire end ferrule output Screw connection 0.75...4 mm², AWG 18...AWG 12) without wire end ferrule input Screw connection 0.75...4 mm², AWG 18...AWG 12) with wire end ferrule input
Line and load regulation	< 0.5 % network 0 to 100 % load at 77 °F (25 °C) < 1 % network full voltage range in line at 77 °F (25 °C)
Status LED	1 LED (Green) output voltage
Depth	4.6 in (117.6 mm)
Height	4.9 in (123.6 mm)
Width	1.6 in (40 mm)
Product Weight	1.15 lb(US) (0.52 kg)
Output coupling	Parallel Serial
Mounting support	Top hat type TH35-15 rail IEC 60715 Top hat type TH35-7.5 rail IEC 60715 Double-profile DIN rail
Supply	SELV IEC 60950-1 SELV IEC 60204-1 SELV IEC 60364-4-41
Dielectric strength	3000 V AC with input to output
Service life	10 year(s)
Overvoltage category	II

Environment

Standards	IEC 62368-1 EN/IEC 61010-1 EN 61010-2-201 EN/IEC 61204-3 IEC 61000-6-1 IEC 61000-6-2 IEC 61000-6-3 IEC 61000-6-4 IEC 61000-3-2 EN 61000-3-3 UL 62368-1 UL 61010-1 UL 61010-2-201 CSA C22.2 No 62368-1 CSA C22.2 No 61010-1 CSA C22.2 No 61010-2-201
Product certifications	CE CUL Listed CUL Recognized RCM CB Scheme EAC KC
Operating altitude	< 5000 m
Shock resistance	150 m/s² 11 ms
IP degree of protection	IP20

Ambient air temperature for operation	-4…14 °F (-20…-10 °C) with current derating of 2 % per °C mounting position A < 6561.68 ft (2000 m) 14…104 °F (-10…40 °C) without derating mounting position A 115 V AC < 6561.68 ft (2000 m) 14…122 °F (-10…50 °C) without derating mounting position A 230 V AC < 6561.68 ft (2000 m) 104…158 °F (40…70 °C) with current derating of 1.67 % per °C mounting position A 115 V AC < 6561.68 ft (2000 m) 122…158 °F (50…70 °C) with current derating of 2.5 % per °C mounting position A 230 V AC < 6561.68 ft (2000 m)
Electrical shock protection class	Class I
Pollution degree	2
Vibration resistance	3 mm (f= 2…9 Hz) conforming to IEC 60068-2-6 10 m/s² (f= 9…200 Hz) conforming to IEC 60068-2-6
Electromagnetic immunity	Immunity to electrostatic discharge - test level: 8 kV (contact discharge) conforming to IEC 61000-4-2 Immunity to electrostatic discharge - test level: 15 kV (air discharge) conforming to IEC 61000-4-2 Immunity to conducted RF disturbances - test level: 15 V/m (80 MHz...2 GHz) conforming to IEC 61000-4-3 Immunity to conducted RF disturbances - test level: 5 V/m (2...2.7 GHz) conforming to IEC 61000-4-3 Immunity to conducted RF disturbances - test level: 5 V/m (2.7...6 GHz) conforming to IEC 61000-4-3 Immunity to fast transients - test level: 4 kV (on input-output) conforming to IEC 61000-4-4 Surge immunity test - test level: 4 kV (between power supply and earth) conforming to IEC 61000-4-5 Surge immunity test - test level: 3 kV (between phases) conforming to IEC 61000-4-5 Immunity to conducted RF disturbances - test level: 15 V (0.15...80 MHz) conforming to IEC 61000-4-6 Immunity to magnetic fields - test level: 30 A/m (50...60 Hz) conforming to IEC 61000-4-8 Immunity to voltage dips conforming to IEC 61000-4-11 Disturbing field emission conforming to EN 55016-2-3 Limits for harmonic current emissions conforming to IEC 61000-3-2 conforming to EN 55016-1-2 conforming to EN 55016-2-1
Electromagnetic emission	Conducted emissions IEC 61000-6-3 Radiated emissions IEC 61000-6-4

Ordering and shipping details

Category	US1CP1222525
Discount Schedule	CP12
GTIN	3606481500229
Returnability	Yes
Country of origin	IN

Packing Units

Unit Type of Package 1	PCE
Nbr. of units in pkg.	1
Package 1 Height	2.1 in (5.4 cm)
Package 1 Width	6.9 in (17.5 cm)
Package 1 Length	7.09 in (18.0 cm)
Package weight(Lbs)	23.8 oz (674.0 g)
Unit Type of Package 2	S03
Number of Units in Package 2	13
Package 2 Height	11.8 in (30 cm)

Package 2 Width	11.8 in (30 cm)
Package 2 Length	15.7 in (40 cm)
Package 2 Weight	20.66 lb(US) (9.37 kg)

Contractual warranty

Warranty (in months)	18

Environmental Data

Schneider Electric aims to achieve Net Zero status by 2050 through supply chain partnerships, lower impact materials, and circularity via our ongoing “Use Better, Use Longer, Use Again” campaign to extend product lifetimes and recyclability.

Environmental Data explained >

How we assess product sustainability >

Environmental footprint

Total lifecycle Carbon footprint	**1 249 kg CO2 eq.**
Carbon footprint of the manufacturing phase [A1 to A3]	**5 kg CO2 eq.**
Carbon footprint of the distribution phase [A4]	**0.2 kg CO2 eq.**
Carbon footprint of the installation phase [A5]	**0 kg CO2 eq.**
Carbon footprint of the use phase [B2, B3, B4, B6]	**1 243 kg CO2 eq.**
Carbon footprint of the end-of-life phase [C1 to C4]	**1 kg CO2 eq.**

Use Better

Materials and Substances

Packaging made with recycled cardboard	**No**
Packaging without single use plastic	**No**
SCIP Number	**698d9b2a-7a6a-4b8f-a149-489156f55645**
EU RoHS Directive	**Compliant By Exemption**
REACh Regulation	**Reference contains Substances of Very High Concern above the threshold**
California proposition 65	**WARNING: This product can expose you to chemicals including: Lead and lead compounds, which is known to the State of California to cause cancer and birth defects or other reproductive harm. For more information go to www.P65Warnings.ca.gov**

Use Longer

Lifetime extension

Repair	**No**

Use Again

Repack and remanufacture

Recyclability potential, in %	**12**
Circularity Profile	**End of Life Information**
Take-back	**No**
WEEE Label	**The product must be disposed on European Union markets following specific waste collection and never end up in rubbish bins.**

Dimensions Drawings

Electrical Safety

- If the unit is use in a manner not specified by the manufacturer, the protection provided by the equipment may be impaired.
- For means of disconnection a switch or circuit breaker, located near the product, must be included in the installation. A marking as disconnecting device for the product is required.
- The device has an internal fuse. The unit is tested and approved with branch circuit protective device up to 20A. This circuit breaker can be used as disconnecting device.
- The power supply is only suitable for audio, video, information, communication, industrial and control equipment.

Dimensions

Front and Side Views

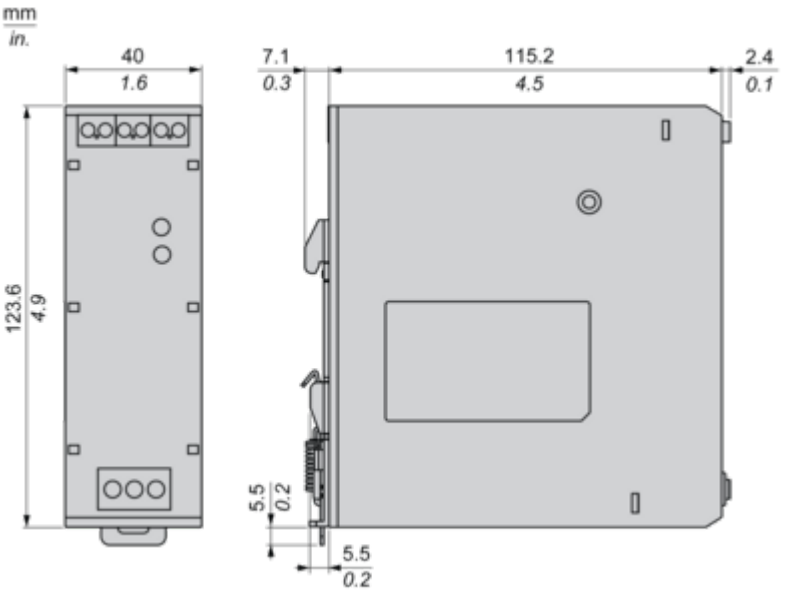

Connections and Schema

Connections and Schema

Correct Parallel Connection

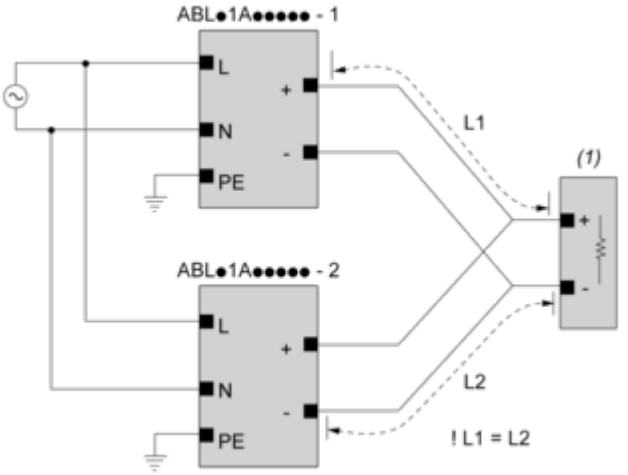

(1) : Load

Incorrect Parallel Connection

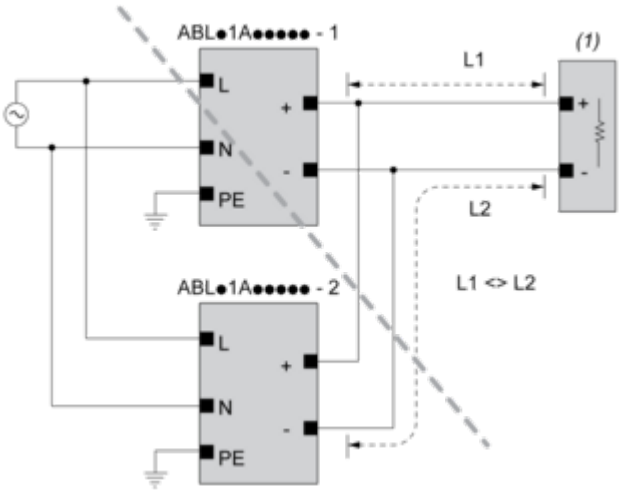

(1) : Load
ABLx1Axxxxx-1 = ABLx1Axxxxx-2
max 2 x ABLx1Axxxxx
L1 = L2
ΔV max 25 mV
I_{Load} < 90% 2 x I_{nom}

Output Voltage Balancing

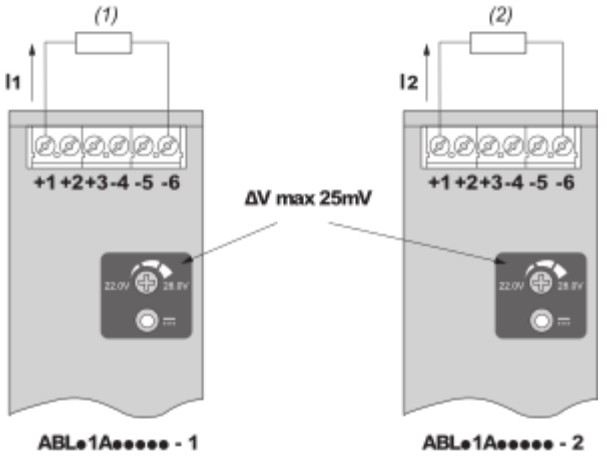

(1) : R_{Load1}

(2) : R_{Load2}

$R_{Load1} = R_{Load2}$

$I_1 = I_2 = \sim I_{nom}$

Series Connection

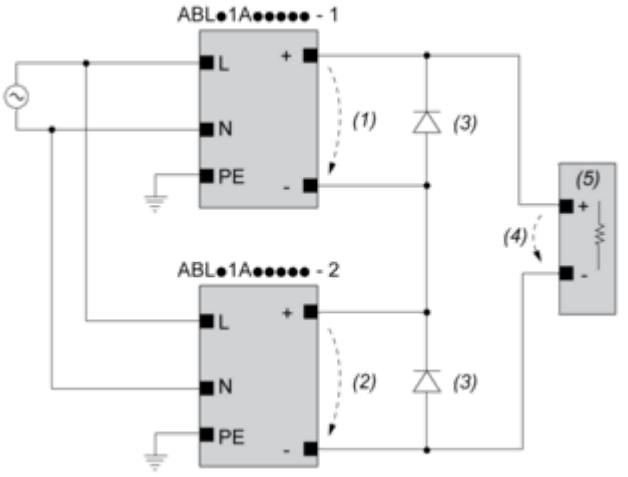

(1) : V_{out1}

(2) : V_{out2}

(3) : 2 x Diode, $V_{RRM} > 2 \times V_{out1/2}$, $I_F > 2 \times I_{nom1/2}$

(4) : $V_{Load} = 2 \times V_{out}$

(5) : Load

Connections and Schema

	(1)		
	<40°C	<50°C	<70°C
ABLS1A24021	50°C	60°C	75°C
ABLS1A24038	50°C	60°C	75°C
ABLS1A12062	50°C	60°C	80°C
ABLS1A24031	50°C	60°C	80°C
ABLS1A12100	60°C	70°C	90°C
ABLS1A24050	60°C	70°C	90°C
ABLS1A48025	60°C	70°C	90°C
ABLS1A24100	60°C	70°C	90°C
ABLS1A24200	95°C	95°C	90°C

(1) : Ambient

Mounting and Clearance

Mounting

Mounting Position A

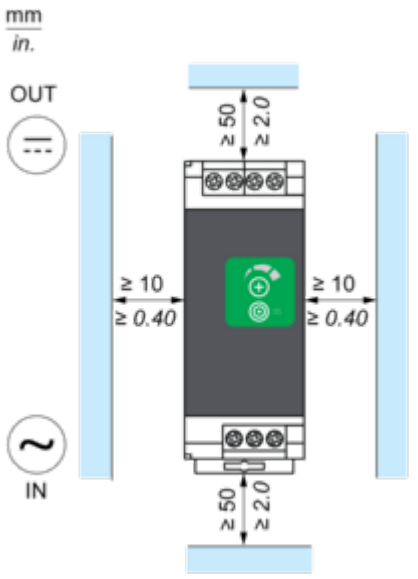

Mounting Position B

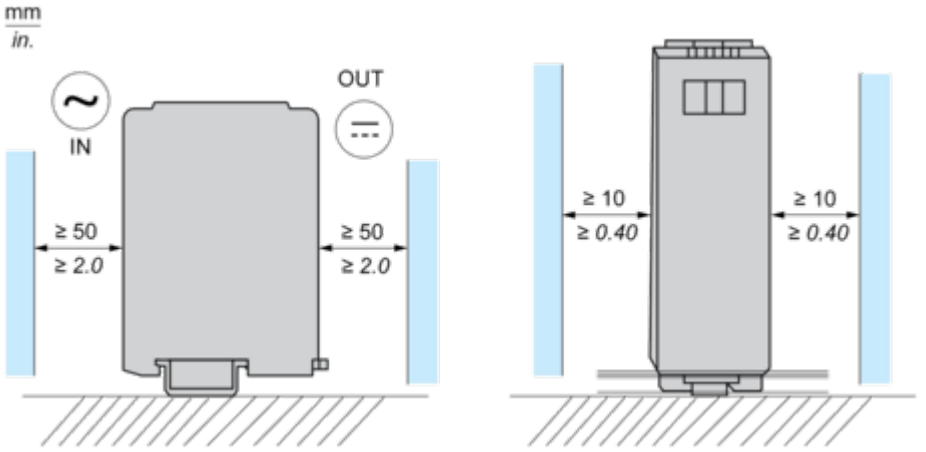

Incorrect Mounting

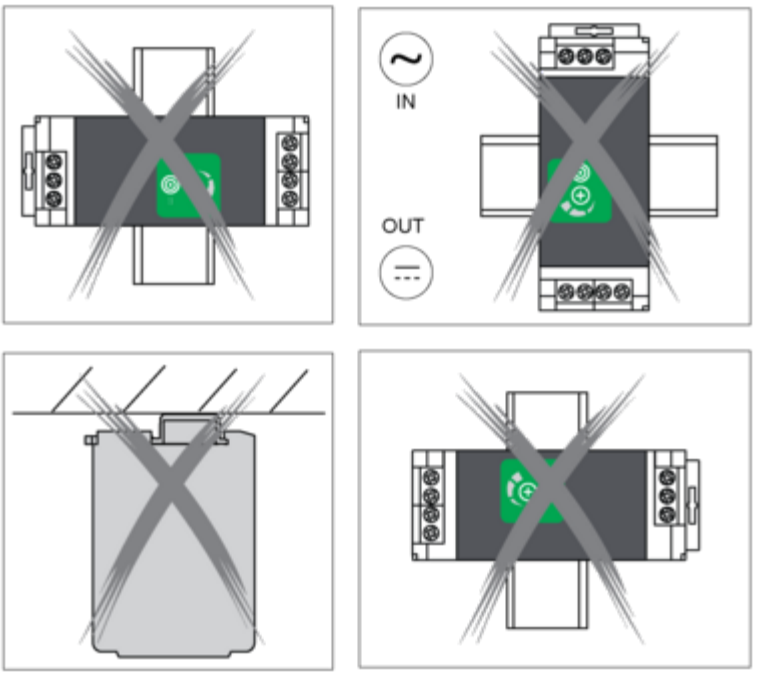
IN
OUT

Performance Curves

Performance Curve

Mounting Position A

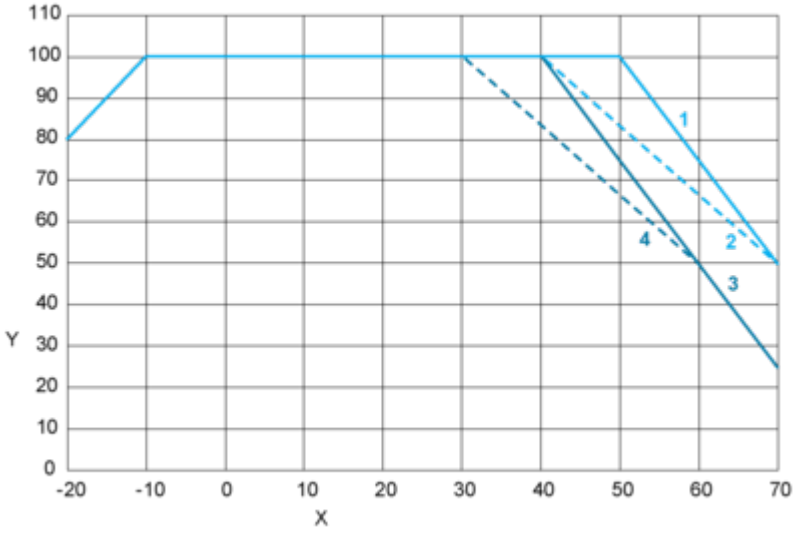

Mounting Position B

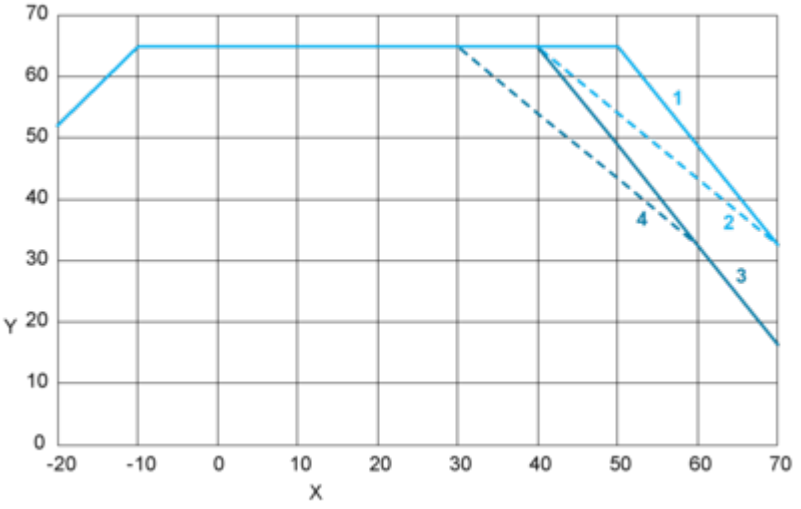

X : Surrounding Air Temperature (°C)
Y : Percentage of Maximum Load (%)
1 : Altitude ≤ 2000 m (6561 ft), Input voltage = 230 VAC / 325 VDC
2 : Altitude ≤ 2000 m (6561 ft), 115 VAC / 162 VDC
3 : Altitude ≤ 5000 m (16404 ft), Input voltage = 230 VAC / 325 VDC
4 : Altitude ≤ 5000 m (16404 ft), 115 VAC / 162 VDC

Image of product / Alternate images

Alternative











