Product data sheet

Specifications



Regulated Power Supply, modicon power supply, 100...240V AC, 24V, 10A, single phase, Panel Mount

ABLP1A24100

Product availability: Stock - Normally stocked in distribution facility

Main

Range of Product	Modicon Power Supply
Product or Component Type	Power supply
Power supply type	Regulated switch mode
Variant option	Panel mount
Enclosure Material	Aluminum
Nominal input voltage	100...240 V AC single phase
Rated power in W	240 W
Output voltage	24 V DC
Power supply output current	10 A

Complementary

Efficiency at full load	85...264 V AC
Nominal network frequency	50…60 Hz
Network system compatibility	TN TT IT
Maximum leakage current	1 mA 240 V AC
Input protection type	Integrated fuse (not interchangeable) 6.3 A
Inrush current	35 A 115 V 60 A 230 V
Power factor	0.95 at 115 V AC 0.91 at 230 V AC
Efficiency	87 % 230 V AC
Output voltage adjustment	21.6...26.4 V
Power dissipation in W	36 W
Current consumption	< 3.6 A 115 V AC < 1.8 A 230 V AC
Turn-on time	< 1.2 s
Holding time	> 20 ms 115 V AC > 40 ms 230 V AC
Startup with capacitive loads	8000 µF
Residual ripple	< 150 mV
Meantime between failure [MTBF]	700000 h at 77 °F (25 °C), full load conforming to SR 332

Price is “List Price” and may be subject to a trade discount – check with your local distributor or retailer for actual price.

Disclaimer: This documentation is not intended as a substitute for and is not to be used for determining suitability or reliability of these products for specific user applications

Output protection type	Against overload and short-circuits, protection technology: automatic reset Against over temperature, protection technology: manual reset Against overvoltage, protection technology: manual reset
Connections - terminals	Screw connection 0.75...2.5 mm², AWG 18...AWG 14) without wire end ferrule Screw connection 0.75...1.5 mm², AWG 18...AWG 16) with wire end ferrule
Line and load regulation	< 0.5 % network 0 to 100 % load at 77 °F (25 °C) < 1 % network full voltage range in line at 77 °F (25 °C)
Status LED	1 LED (Green) output voltage
Depth	7.5 in (190 mm)
Height	2.0 in (50 mm)
Width	3.7 in (93 mm)
Product Weight	1.87 lb(US) (0.85 kg)
Output coupling	Parallel Serial
Mounting support	Top hat type TH35-15 rail IEC 60715 Top hat type TH35-7.5 rail IEC 60715 Double-profile DIN rail panel mounting
Supply	SELV IEC 60950-1 SELV IEC 60204-1 SELV IEC 60364-4-41
Dielectric strength	3000 V AC with input to output
Service life	10 year(s)
Overvoltage category	II

Environment

Standards	IEC 62368-1 EN/IEC 61010-1 EN 61010-2-201 EN/IEC 61204-3 IEC 61000-6-1 IEC 61000-6-2 IEC 61000-6-3 IEC 61000-6-4 IEC 61000-3-2 EN 61000-3-3 UL 62368-1 UL 61010-1 UL 61010-2-201 CSA C22.2 No 62368-1 CSA C22.2 No 61010-1 CSA C22.2 No 61010-2-201 IEC 60335-1
Product certifications	CE CULus EAC RCM CB Scheme KC
Operating altitude	5000 m
Shock resistance	150 m/s² 11 ms
IP degree of protection	IP10
Ambient air temperature for operation	14…122 °F (-10…50 °C) without derating mounting position A, B, C, D, F, G < 6561.68 ft (2000 m) 122…158 °F (50…70 °C) with current derating of 2.5 % per °C mounting position A, B, C, D, F, G < 6561.68 ft (2000 m) 122…158 °F (50…70 °C) with current derating of 2.5 % per °C < 6561.68 ft (2000 m)
Electrical shock protection class	Class I

Pollution degree	2
Vibration resistance	3 mm (f= 2…9 Hz) conforming to IEC 60068-2-6 10 m/s² (f= 9…200 Hz) conforming to IEC 60068-2-6
Electromagnetic immunity	Immunity to electrostatic discharge - test level: 8 kV (contact discharge) conforming to IEC 61000-4-2 Immunity to electrostatic discharge - test level: 15 kV (air discharge) conforming to IEC 61000-4-2 Immunity to conducted RF disturbances - test level: 15 V/m (80 MHz...2 GHz) conforming to IEC 61000-4-3 Immunity to conducted RF disturbances - test level: 5 V/m (2...2.7 GHz) conforming to IEC 61000-4-3 Immunity to conducted RF disturbances - test level: 5 V/m (2.7...6 GHz) conforming to IEC 61000-4-3 Immunity to fast transients - test level: 4 kV (on input-output) conforming to IEC 61000-4-4 Surge immunity test - test level: 4 kV (between power supply and earth) conforming to IEC 61000-4-5 Surge immunity test - test level: 3 kV (between phases) conforming to IEC 61000-4-5 Immunity to conducted RF disturbances - test level: 15 V (0.15...80 MHz) conforming to IEC 61000-4-6 Immunity to magnetic fields - test level: 30 A/m (50...60 Hz) conforming to IEC 61000-4-8 Immunity to voltage dips conforming to IEC 61000-4-11 Disturbing field emission conforming to EN 55016-2-3 Limits for harmonic current emissions conforming to IEC 61000-3-2 conforming to EN 55016-1-2 conforming to EN 55016-2-1
Electromagnetic emission	Conducted emissions IEC 61000-6-3 Radiated emissions IEC 61000-6-4

Ordering and shipping details

Category	US1CP1222524
Discount Schedule	CP12
GTIN	3606481500304
Returnability	Yes
Country of origin	CN

Packing Units

Unit Type of Package 1	PCE
Nbr. of units in pkg.	1
Package 1 Height	2.362 in (6.000 cm)
Package 1 Width	5.512 in (14.000 cm)
Package 1 Length	9.646 in (24.500 cm)
Package weight(Lbs)	34.709 oz (984.000 g)
Unit Type of Package 2	S03
Number of Units in Package 2	9
Package 2 Height	11.811 in (30.000 cm)
Package 2 Width	11.811 in (30.000 cm)
Package 2 Length	15.748 in (40.000 cm)
Package 2 Weight	20.435 lb(US) (9.269 kg)
Unit Type of Package 3	P06
Number of Units in Package 3	72
Package 3 Height	29.528 in (75.000 cm)

Package 3 Width	31.496 in (80.000 cm)
Package 3 Length	23.622 in (60.000 cm)
Package 3 Weight	181.114 lb(US) (82.152 kg)

Contractual warranty

Warranty (in months)	18

Environmental Data

Schneider Electric aims to achieve Net Zero status by 2050 through supply chain partnerships, lower impact materials, and circularity via our ongoing “Use Better, Use Longer, Use Again” campaign to extend product lifetimes and recyclability.

Environmental Data explained >

How we assess product sustainability >

Environmental footprint

Total lifecycle Carbon footprint	**1 559 kg CO2 eq.**
Carbon footprint of the manufacturing phase [A1 to A3]	**14 kg CO2 eq.**
Carbon footprint of the distribution phase [A4]	**0.1 kg CO2 eq.**
Carbon footprint of the installation phase [A5]	**0 kg CO2 eq.**
Carbon footprint of the use phase [B2, B3, B4, B6]	**1 545 kg CO2 eq.**
Carbon footprint of the end-of-life phase [C1 to C4]	**0.5 kg CO2 eq.**
Environmental Disclosure	**Product Environmental Profile**

Use Better

Materials and Substances

Packaging made with recycled cardboard	**No**
Packaging without single use plastic	**No**
SCIP Number	**E8b5e85f-3dd8-4246-afe7-a3c3cb549e5c**
EU RoHS Directive	**Compliant By Exemption**
REACh Regulation	**Reference contains Substances of Very High Concern above the threshold**
California proposition 65	**WARNING: This product can expose you to chemicals including: Lead and lead compounds, which is known to the State of California to cause cancer and birth defects or other reproductive harm. For more information go to www.P65Warnings.ca.gov**

Use Longer

Lifetime extension

Repair	**No**

Use Again

Repack and remanufacture

Circularity Profile	**End of Life Information**
Take-back	**No**
WEEE Label	**The product must be disposed on European Union markets following specific waste collection and never end up in rubbish bins.**

Dimensions Drawings

Electrical Safety

- If the unit is use in a manner not specified by the manufacturer, the protection provided by the equipment may be impaired.
- For means of disconnection a switch or circuit breaker, located near the product, must be included in the installation. A marking as disconnecting device for the product is required.
- The device has an internal fuse. The unit is tested and approved with branch circuit protective device up to 20A. This circuit breaker can be used as disconnecting device.
- The power supply is only suitable for audio, video, information, communication, industrial and control equipment.

Dimensions

Front and Side Views

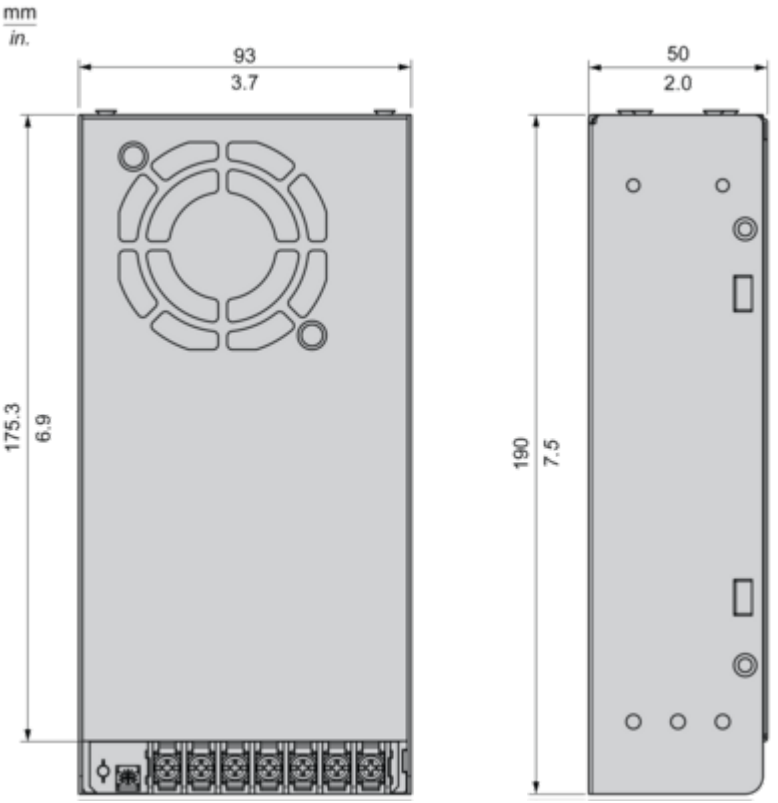

Connections and Schema

Connections and Schema

Correct Parallel Connection

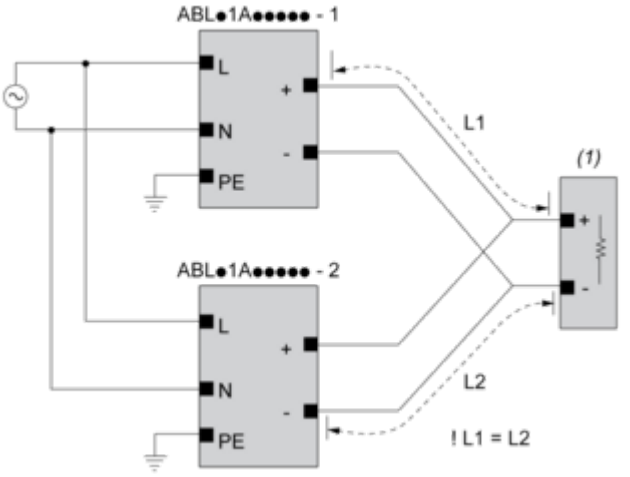

(1) : Load

Incorrect Parallel Connection

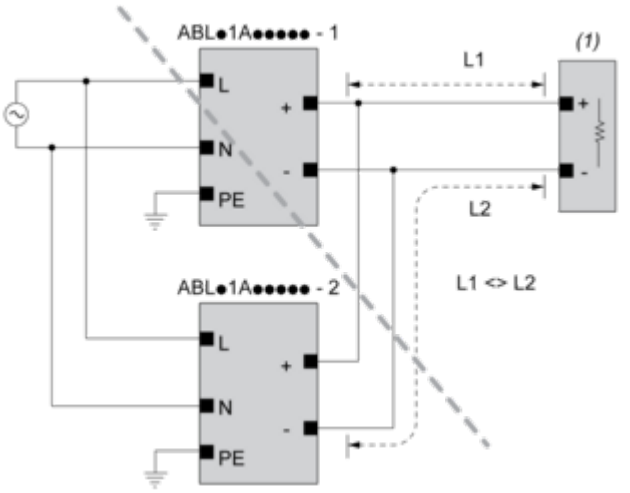

(1) : Load
ABLx1Axxxxx-1 = ABLx1Axxxxx-2
max 2 x ABLx1Axxxxx
L1 = L2
ΔV max 25 mV
$I_{Load} < 90\% \ 2 \times I_{nom}$

Output Voltage Balancing

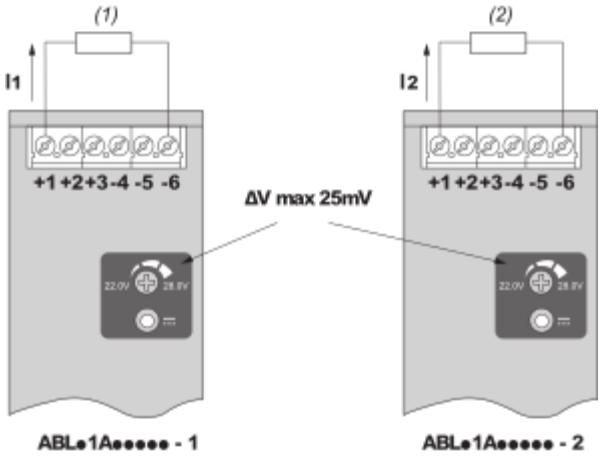

(1) : R_{Load1}

(2) : R_{Load2}

$R_{Load1} = R_{Load2}$

$I_1 = I_2 = \sim I_{nom}$

Series Connection

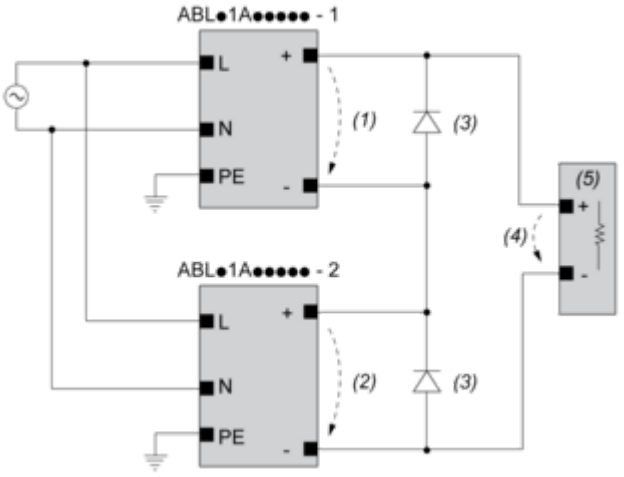

(1) : V_{out1}

(2) : V_{out2}

(3) : 2 x Diode, $V_{RRM} > 2 \times V_{out1/2}$, $I_F > 2 \times I_{nom1/2}$

(4) : $V_{Load} = 2 \times V_{out}$

(5) : Load

Connections and Schema

	(1)		
	<40ºC	<50ºC	<70ºC
ABLP1A12085	60ºC	70ºC	90ºC
ABLP1A24045	60ºC	70ºC	90ºC
ABLP1A24062	60ºC	70ºC	90ºC
ABLP1A24100	60ºC	70ºC	90ºC

(1) : Ambient

Mounting and Clearance

Mounting

Mounting Position A

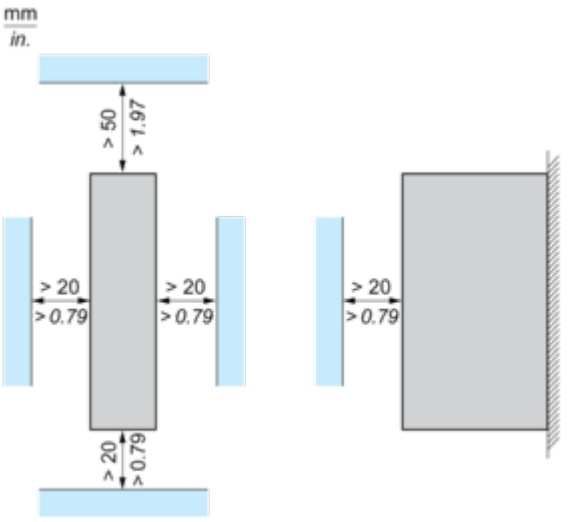

Mounting Position B

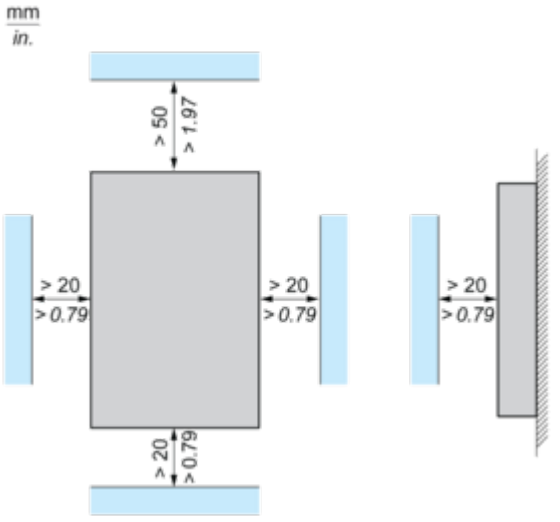

Mounting Position C

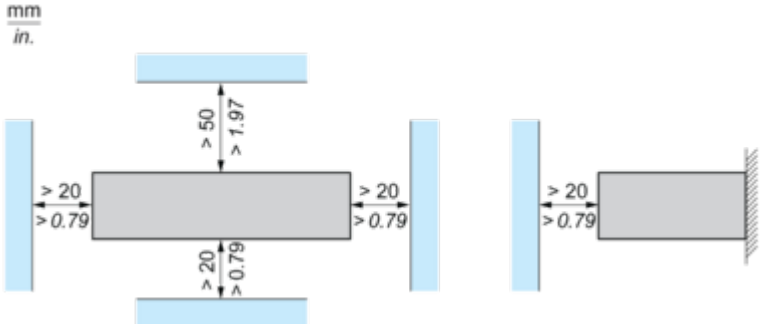

Mounting Position D1

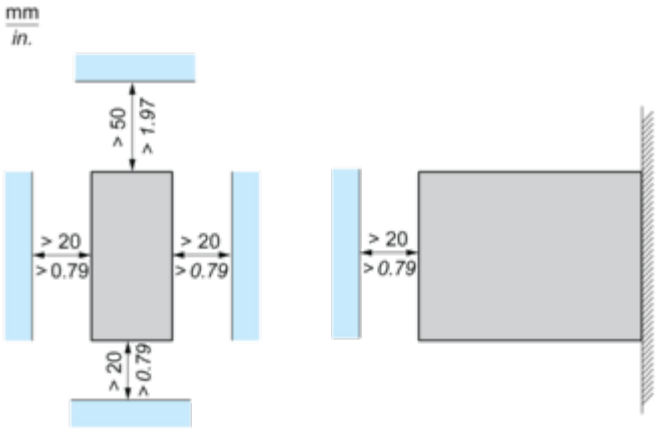

Mounting Position D2 and F

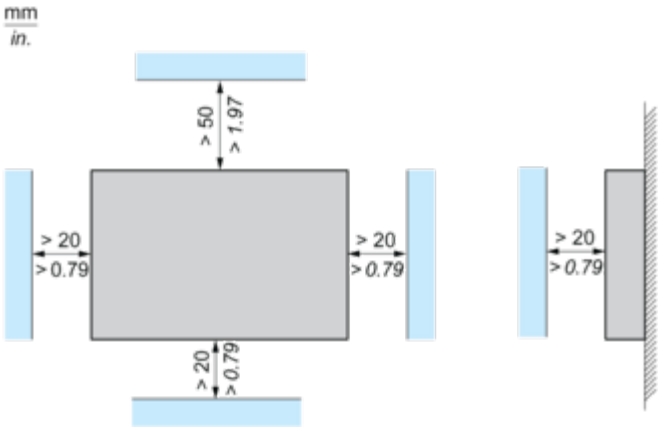

Mounting Position G

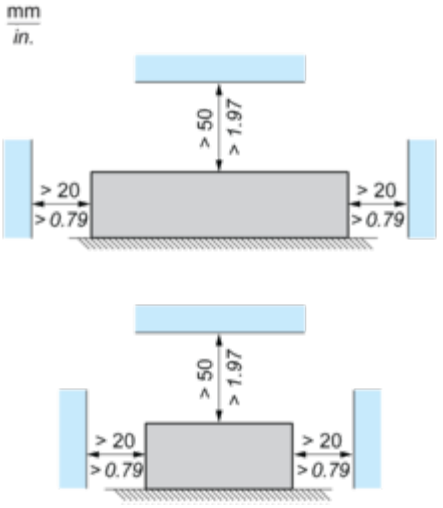

Performance Curves

Performance Curves

Mounting Positions A, B, C, D, F and G

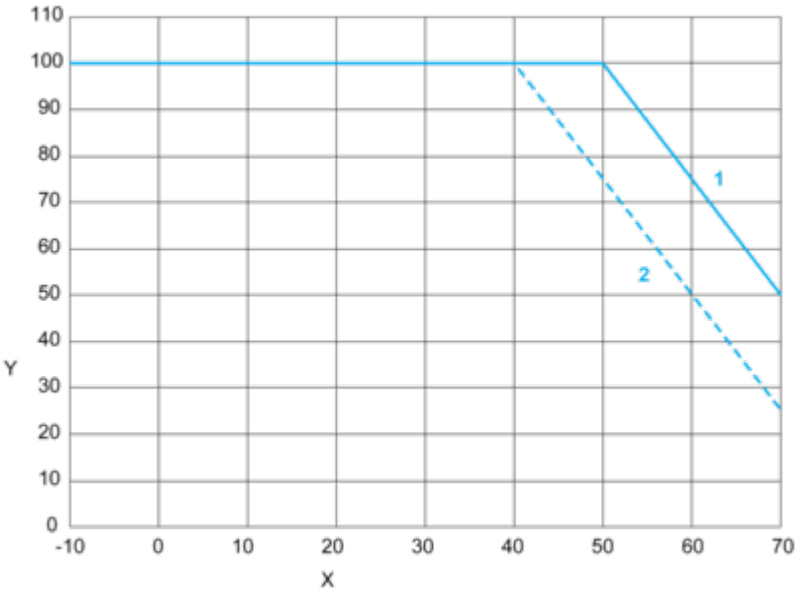

X : Surrounding Air Temperature (°C)
Y : Percentage of Max Load (%)
1 : Altitude 2000 m
2 : Altitude 5000 m
Note : < 100 VAC additional derating by 1.33% / VAC

Image of product / Alternate images

Alternative



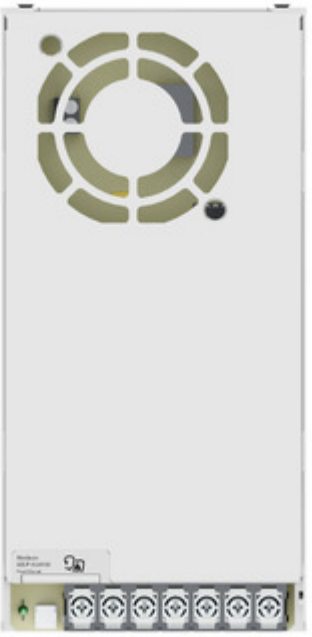

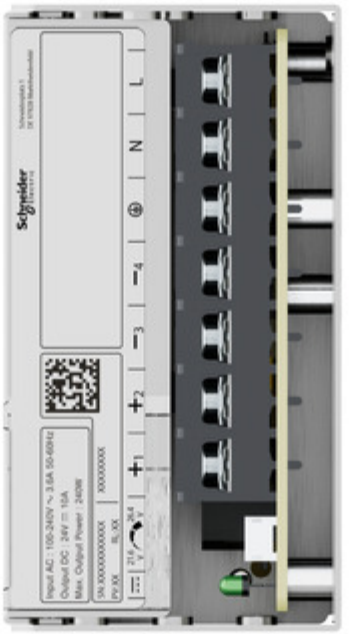
Schneider Electric
L
N
⊕
-4
-3
+2
+1
Input AC : 100-240V ~ 3.6A 50-60Hz
Output DC : 24V ⎓ 10A
Max. Output Power : 240W





