Product data sheet

Specifications

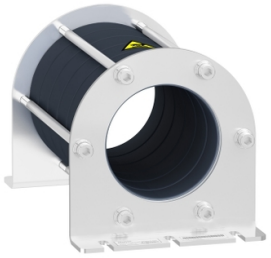

common mode filter for bearing current reduction, 180µH

VW3A5504

Product availability: Non-Stock - Not normally stocked in distribution facility

Main

Product or Component Type	Common mode output filter
Range Compatibility	Altivar Process ATV600 Altivar Process ATV900
Value of inductance	180 µH
Product compatibility	Variable speed drive ATV630 wall mount, 15…90 kW, 380...480 V Variable speed drive ATV650 wall mount, 15…90 kW, 380...480 V Variable speed drive ATV930 wall mount, 15…90 kW, 380...480 V Variable speed drive ATV950 wall mount, 15…90 kW, 380...480 V Variable speed drive ATV630 wall mount, 7.5…45 kW, 200...240 V Variable speed drive ATV930 wall mount, 7.5…45 kW, 200...240 V

Complementary

Maximum motor cable length	492.1 ft (150 m)(shielded cable)30…90 kW 380...480 V 1 984.3 ft (300 m)(unshielded cable)15…90 kW 380...480 V 1 984.3 ft (300 m)(shielded cable)30…90 kW 380...480 V 1 VW3A5503 1640.4 ft (500 m)(unshielded cable)30…90 kW 380...480 V 1 VW3A5503 1640.4 ft (500 m)(shielded cable)15…22 kW 380...480 V 1 VW3A5503 1640.4 ft (500 m)(shielded cable)30…90 kW 380...480 V 2 3280.8 ft (1000 m)(unshielded cable)15…22 kW 380...480 V 1 VW3A5503 3280.8 ft (1000 m)(unshielded cable)30…90 kW 380...480 V 2 492.1 ft (150 m)(shielded cable)15…45 kW 200...240 V 1 984.3 ft (300 m)(unshielded cable)7.5…45 kW 200...240 V 1 984.3 ft (300 m)(shielded cable)15…45 kW 200...240 V 1 VW3A5503 1640.4 ft (500 m)(unshielded cable)15…45 kW 200...240 V 1 VW3A5503 1640.4 ft (500 m)(shielded cable)7.5…11 kW 200...240 V 1 VW3A5503 1640.4 ft (500 m)(shielded cable)15…45 kW 200...240 V 2 3280.8 ft (1000 m)(unshielded cable)7.5…11 kW 200...240 V 1 VW3A5503 3280.8 ft (1000 m)(unshielded cable)15…45 kW 200...240 V 2
Saturation current	2.2 A
internal diameter	3.0 in (76 mm) 3-phase cable inside 3.0 in (76 mm) PE cable outside
Electrical Insulation Class	Class I
Mechanical robustness	Shocks class 3M4 IEC 60721-3-3 Vibrations class 3M4 IEC 60721-3-3
Switching frequency	<= 10 kHz
Maximum output frequency	100 Hz
Height	8.3 in (210 mm)
Width	5.02 in (127.5 mm)
Depth	5.02 in (127.5 mm)
Product Weight	6.53 lb(US) (2.96 kg)

Environment

Relative humidity	5…95 % without condensation

Price is “List Price” and may be subject to a trade discount – check with your local distributor or retailer for actual price.

Disclaimer: This documentation is not intended as a substitute for and is not to be used for determining suitability or reliability of these products for specific user applications

Ambient Air Temperature for Operation	5…140 °F (-15…60 °C)
Ambient Air Temperature for Storage	-40…158 °F (-40…70 °C)

Ordering and shipping details

Category	US1CP4E22276
Discount Schedule	CP4E
GTIN	3606485435794
Returnability	Yes
Country of origin	TH

Packing Units

Unit Type of Package 1	PCE
Nbr. of units in pkg.	1
Package 1 Height	6.693 in (17.000 cm)
Package 1 Width	10.906 in (27.700 cm)
Package 1 Length	7.165 in (18.200 cm)
Package weight(Lbs)	7.337 lb(US) (3.328 kg)
Unit Type of Package 2	P06
Number of Units in Package 2	24
Package 2 Height	29.528 in (75.000 cm)
Package 2 Width	23.622 in (60.000 cm)
Package 2 Length	31.496 in (80.000 cm)
Package 2 Weight	204.748 lb(US) (92.872 kg)

Contractual warranty

Warranty (in months)	18

Environmental Data

Schneider Electric aims to achieve Net Zero status by 2050 through supply chain partnerships, lower impact materials, and circularity via our ongoing “Use Better, Use Longer, Use Again” campaign to extend product lifetimes and recyclability.

Environmental Data explained >

How we assess product sustainability >

Use Better

Materials and Substances

Packaging made with recycled cardboard	No
Packaging without single use plastic	No
EU RoHS Directive	Compliant
REACh Regulation	Free of Substances of Very High Concern above the threshold
California proposition 65	WARNING: This product can expose you to chemicals including: Lead and lead compounds, which is known to the State of California to cause cancer and birth defects or other reproductive harm. For more information go to www.P65Warnings.ca.gov

Use Longer

Lifetime extension

Repair	No

Use Again

Repack and remanufacture

Take-back	No

Dimensions Drawings

Dimensions

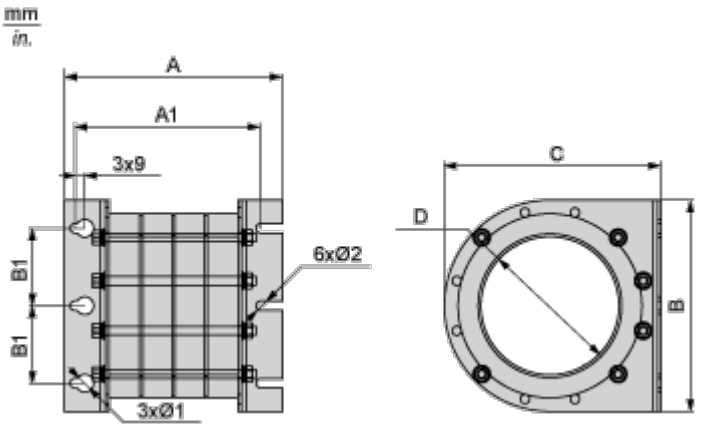

Dimensions in mm

A	A1	B1	Ø1	Ø2	B	C	D
210	187	45	13	6.5	127.5	127.5	75

Dimensions in in.

A	A1	B1	Ø1	Ø2	B	C	D
8.3	7.1	1.8	0.5	0.26	5.0	5.0	3.0

Mounting and Clearance

Mounting Recommendations

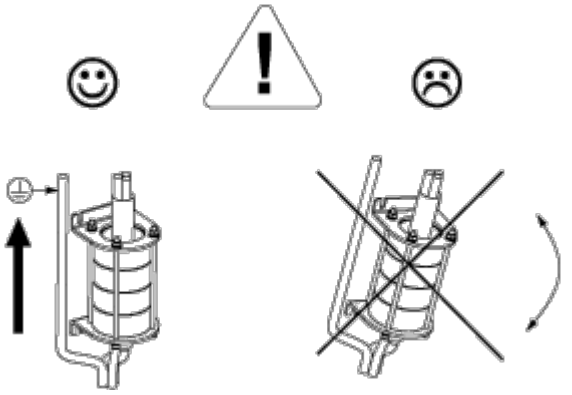

Connections and Schema

Recommended Schema

Connection at the Output Terminals of the Drive

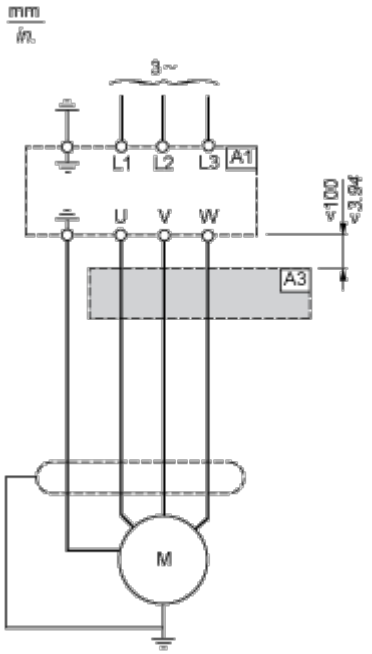

A1 : Drive

A3 : Common mode filter

Connection at the Output Terminals of the dv/dt Filter or Sinus Filter

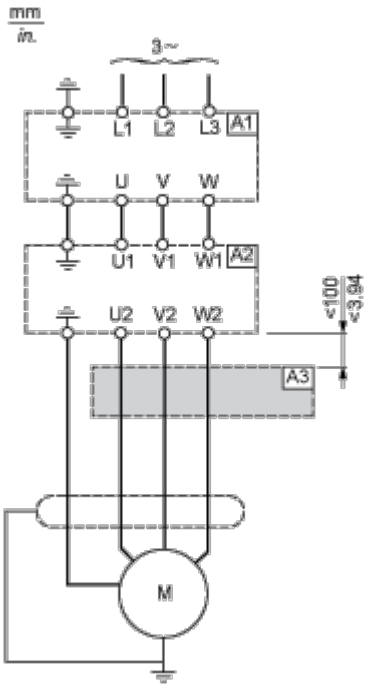

A1 : Drive

A2 : dv/dt or sinus filter

A3 : Common mode filter