Product data sheet
Characteristics

K50F003UP
Cam changeover switch, Harmony K, front mounting, plastic, 3 poles, position 0, 60°, 50A, 64x64mm, marked 1/0/2



Main

Range of Product	Harmony K
Product or Component Type	Complete cam switch
Component name	K50
[Ith] conventional free air thermal current	50 A
Mounting Location	Front
Fixing Mode	4 holes
Cam switch head type	With front plate 64 x 64 mm
Type of operator	Black handle
Rotary handle padlocking	Without
Presentation of legend	With metallic, 1 - 0 - 2 black
Cam switch function	Changeover switch
Return	Without
Off position	With Off position
Poles description	3P
Switching positions	Right: 0° - 60° Left: 0° - 300°
IP degree of protection	IP40 conforming to IEC 60529

Complementary

Switching angle	60 °
[Ui] rated insulation voltage	690 V 3)IEC 60947-1
Short-circuit current	5000 A
Short-circuit protection	63 A cartridge fuse gG
[Uimp] rated impulse withstand voltage	6 KV EN 947-1 6 kV IEC 947-1
Contact operation	Slow-break
Positive opening	With
Electrical connection	Captive screw clamp terminals flexible 2 x 6 mm² Captive screw clamp terminals solid 2 x 10 mm²
Tightening torque	17.70 lbf.in (2 N.m)

The information provided in this documentation contains general descriptions and/or technical characteristics of the performance of the products contained herein.
This documentation is not intended as a substitute for and is not to be used for determining suitability or reliability of these products for specific user applications.
It is the duty of any such user or integrator to perform the appropriate and complete risk analysis, evaluation and testing of the products with respect to the relevant specific application or use thereof.
Neither Schneider Electric Industries SAS nor any of its affiliates or subsidiaries shall be responsible or liable for misuse of the information contained herein.

Switching capacity in mA	15000 mA DC 120 V 2 inductive 50 ms) 15000 mA DC 180 V 3 inductive 50 ms) 15000 mA DC 60 V 1 inductive 50 ms) 20000 mA DC 140 V 3 inductive 50 ms) 20000 mA DC 48 V 1 inductive 50 ms) 20000 mA DC 95 V 2 inductive 50 ms) 30000 mA DC 30 V 1 inductive 50 ms) 30000 mA DC 60 V 2 inductive 50 ms) 30000 mA DC 90 V 3 inductive 50 ms) 3500 mA DC 110 V 1 inductive 50 ms) 3500 mA DC 220 V 2 inductive 50 ms) 3500 mA DC 330 V 3 inductive 50 ms) 37000 mA DC 120 V 2 resistive 1 ms) 37000 mA DC 180 V 3 resistive 1 ms) 37000 mA DC 60 V 1 resistive 1 ms) 40000 mA DC 140 V 3 resistive 1 ms) 40000 mA DC 24 V 1 inductive 50 ms) 40000 mA DC 48 V 1 resistive 1 ms) 40000 mA DC 48 V 2 inductive 50 ms) 40000 mA DC 70 V 3 inductive 50 ms) 40000 mA DC 95 V 2 resistive 1 ms) 50000 mA DC 24 V 1 resistive 1 ms) 50000 mA DC 48 V 2 resistive 1 ms) 50000 mA DC 70 V 3 resistive 1 ms)
Mechanical durability	300000 cycles
CAD overall width	2.52 in (64 mm)
CAD overall height	2.52 in (64 mm)
CAD overall depth	4.72 in (120 mm)
Net Weight	1.17 lb(US) (0.53 kg)

Environment

Standards	IEC 60947-3
Product certifications	CULus 120 V 3 hp 1 phase CULus 480 V 25 hp 3 phase CULus 240 V 7.5 hp 1 phase CULus 240 V 7.5 hp 3 phase
Protective treatment	TC
Ambient Air Temperature for Operation	-13…131 °F (-25…55 °C)
Ambient Air Temperature for Storage	-40…158 °F (-40…70 °C)
Overvoltage category	Class II IEC 60536 Class II NF C 20-030

Ordering and shipping details

Category	21446-9003 K CAM SWITCHES
Discount Schedule	CS1
GTIN	3389110083361
Returnability	No
Country of origin	AT

Packing Units

Unit Type of Package 1	PCE
Number of Units in Package 1	1
Package 1 Height	5.39 in (13.7 cm)
Package 1 Width	2.83 in (7.2 cm)
Package 1 Length	2.83 in (7.2 cm)
Package 1 Weight	13.51 oz (383.0 g)
Unit Type of Package 2	S03
Number of Units in Package 2	30
Package 2 Height	11.81 in (30.0 cm)
Package 2 Width	11.81 in (30.0 cm)
Package 2 Length	15.75 in (40.0 cm)
Package 2 Weight	26.53 lb(US) (12.034 kg)

Offer Sustainability

California proposition 65	WARNING: This product can expose you to chemicals including: Nickel compounds, which is known to the State of California to cause cancer, and Di-isodecyl phthalate (DIDP), which is known to the State of California to cause birth defects or other reproductive harm. For more information go to www.P65Warnings.ca.gov
REACh Regulation	REACh Declaration
REACh free of SVHC	Yes
EU RoHS Directive	Pro-active compliance (Product out of EU RoHS legal scope) EU RoHS Declaration
Toxic heavy metal free	Yes
Mercury free	Yes
China RoHS Regulation	China RoHS Declaration
RoHS exemption information	Yes
WEEE	The product must be disposed on European Union markets following specific waste collection and never end up in rubbish bins.

Contractual warranty

Warranty	18 months

Dimensions

Front Mounting

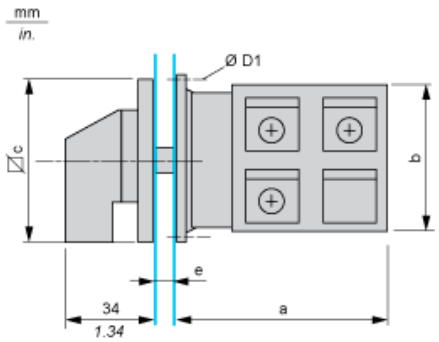

e support panel thickness 0.5 to 5.5 mm / 0.02 to 0.22 in in.

a		b		c		D1	
mm	in.	mm	in.	mm	in.	mm	in.
80.8	3.18	60	2.36	64	2.52	4.1	0.16

Panel Cut-Out

Front Mounting

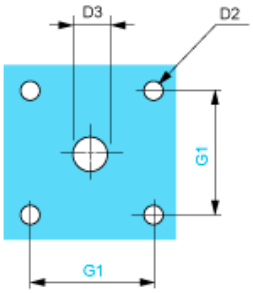

D2		D3		G1	
mm	in.	mm	in.	mm	in.
4.5	0.18	10	0.39	48	1.89

Link Positions (Factory Mounted)

Diagram for 1 to 4-pole Switches

Select the number of poles according to the product characteristics

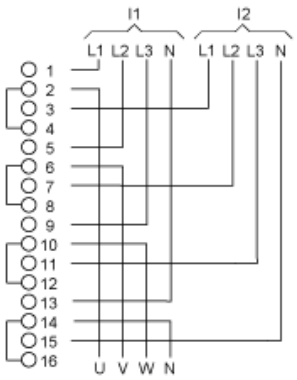

I1 Input 1
I2 Input 2

Marking

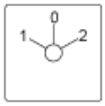

Angular Position of Switch

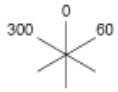

Switching Program

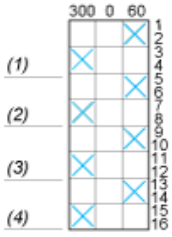

(1) 1-pole
(2) 2-pole
(3) 3-pole
(4) 4-pole

Convention Used for Switching Program Representation

Contact closed

Contact closed in 2 positions and maintained between the 2 positions

Sealed assembly for auto-maintain control

Overlapping contacts

Spring return position: for a switching angle of 90°, spring return is over 30° after the last position (for a maximum of 3 simultaneous contacts).

Example:

