Product data sheet
Characteristics

NSYTRV42BR
SCREW TERMINAL, FEED THROUGH, 2 POINTS, 4MM² , BROWN

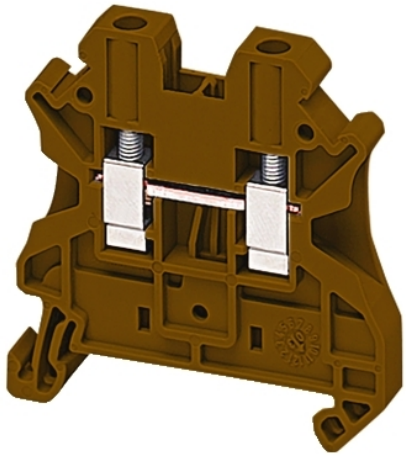

Main

Range	Linergy
Product name	Linergy TR
Product or Component Type	Terminal block
Device short name	TRV
Terminal block type	Passthrough
Terminal block level	1
Mounting Mode	Clip-on
Nominal cross section	0.01 in² (4 mm²)
Length	1.88 in (47.7 mm)
Color	Brown
Quantity per Set	Set of 50

Complementary

Width	0.24 in (6.2 mm)
Height	1.87 in (47.5 mm)
Connections - terminals	1 x screw terminal upstream 1 x screw terminal downstream
Number of connections	2
Connection position	Sideways
Number of measurement input	2
Cable cross section	0.00…0.01 In² (0.14…6 mm²), flexible without cable end 0.00…0.01 in² (0.14…6 mm²), solid
Tightening torque	5.31…7.08 lbf.in (0.6…0.8 N.m)
Wire stripping length	0.35 in (9 mm)
Tool type	Connection screwdriver Disconnection screwdriver
[Ue] rated operational voltage	1000 V EN/IEC 60947-7-1 600 V CSA 690 V ATEX Exe II Ex II 2 GD 600 V cURus
Line Rated Current	32 A EN/IEC 60947-7-1 30 A CSA 30 A ATEX Exe II Ex II 2 GD 30 A cURus
Material	Polyamide 6/6 insulating case
Dielectric loss	0.01 at 1 MHz IEC 60250 0.01 at 1 MHz VDE 0303-T4
Dielectric constant	3.7 at 1 MHz
Resistivity	10000 MΩ.M IEC 60093 10000 MΩ.m VDE 0303-T30
Surface resistance	1000 GΩ IEC 60093 1000 GΩ VDE 0303-T30
Creep resistance	500 CTI (> 400 kB) IEC 60093 500 CTI (> 400 kB) VDE 0303-T30
Flame retardance	V0 0.03 in (0.8 mm) UL 94
Net Weight	0.33 oz (9.4 g)

The information provided in this documentation contains general descriptions and/or technical characteristics of the performance of the products contained herein.
This documentation is not intended as a substitute for and is not to be used for determining suitability or reliability of these products for specific user applications.
It is the duty of any such user or integrator to perform the appropriate and complete risk analysis, evaluation and testing of the products with respect to the relevant specific application or use thereof.
Neither Schneider Electric Industries SAS nor any of its affiliates or subsidiaries shall be responsible or liable for misuse of the information contained herein.

Range compatibility	Prisma G Prisma P Prisma PH Prisma Pack Spacial Kaedra Pragma TeSys
Product Compatibility	Spacial enclosures

Environment

Product Certifications	DNV LR GL ATEX VDE CSA EAC IEC-Ex cURus
Dielectric strength	1000 V IEC 60243-1
Ambient air temperature for operation	-40…266 °F (-40…130 °C) IEC 60216-1 -40…266 °F (-40…130 °C) VDE 0304-T21

Ordering and shipping details

Category	21715-IEC TERMINAL BLOCKS-NSY,AM1,DF6,GK1
Discount Schedule	CP5
GTIN	3606480794186
Returnability	No
Country of origin	DE

Packing Units

Unit Type of Package 1	PCE
Number of Units in Package 1	1
Package 1 Height	0.31 in (0.800 cm)
Package 1 Width	1.89 in (4.800 cm)
Package 1 Length	1.97 in (5.000 cm)
Package 1 Weight	0.32 oz (9.000 g)
Unit Type of Package 2	BB1
Number of Units in Package 2	50
Package 2 Height	2.17 in (5.500 cm)
Package 2 Width	2.36 in (6.000 cm)
Package 2 Length	12.60 in (32.000 cm)
Package 2 Weight	16.86 oz (478.000 g)
Unit Type of Package 3	S03
Number of Units in Package 3	1150
Package 3 Height	11.81 in (30.000 cm)
Package 3 Width	11.81 in (30.000 cm)
Package 3 Length	15.75 in (40.000 cm)
Package 3 Weight	25.30 lb(US) (11.476 kg)

Offer Sustainability

Sustainable offer status	Green Premium product
REACh Regulation	REACh Declaration
EU RoHS Directive	Compliant EU RoHS Declaration
Mercury free	Yes
China RoHS Regulation	China RoHS Declaration
RoHS exemption information	Yes

Environmental Disclosure	Product Environmental Profile
WEEE	The product must be disposed on European Union markets following specific waste collection and never end up in rubbish bins.