Product data sheet

Specifications



variable speed drive, Altivar Machine ATV320, 4kW, 380 to 500V, 3 phases, enclosed

ATV320U40N4W

Product availability: Non-Stock - Not normally stocked in distribution facility

Main

Range of Product	Altivar Machine ATV320
Product or Component Type	Variable speed drive
Product Specific Application	Complex machines
Variant	Standard version
Format of the drive	Enclosed
Mounting Mode	Wall mount
Communication Port Protocol	Modbus serial CANopen
Option card	communication module, CANopen communication module, EtherCAT communication module, Profibus DP V1 communication module, PROFINET communication module, Ethernet Powerlink communication module, EtherNet/IP communication module, DeviceNet
[Us] rated supply voltage	380...500 V - 15...10 %
nominal output current	9.5 A
Motor power kW	4.0 kW heavy duty
Maximum Horse Power Rating	5 hp
EMC filter	Class C2 EMC filter integrated
IP degree of protection	IP66

Complementary

Discrete input number	7
Discrete input type	STO safe torque off, 24 V DC1.5 kOhm DI1...DI6 logic inputs, 24 V DC 30 V) DI5 programmable as pulse input 0…30 kHz, 24 V DC 30 V)
Discrete input logic	Positive logic (source) Negative logic (sink)
Discrete output number	3
Discrete output type	Open collector DQ+ 0…1 kHz 30 V DC 100 mA Open collector DQ- 0…1 kHz 30 V DC 100 mA
Analogue input number	3
Analogue input type	AI1 voltage 0...10 V DC 30 kOhm 10 bits AI2 bipolar differential voltage +/- 10 V DC 30 kOhm 10 bits AI3 current 0...20 mA (or 4-20 mA, x-20 mA, 20-x mA or other patterns by configuration) 250 Ohm 10 bits
Analogue output number	1

Price is “List Price” and may be subject to a trade discount – check with your local distributor or retailer for actual price.

Disclaimer: This documentation is not intended as a substitute for and is not to be used for determining suitability or reliability of these products for specific user applications

Analogue output type	Software-configurable current AQ1 0...20 mA 800 Ohm 10 bits Software-configurable voltage AQ1 0...10 V DC 470 Ohm 10 bits
Relay output type	Configurable relay logic R1A 1 NO 100000 cycles Configurable relay logic R1B 1 NC 100000 cycles Configurable relay logic R1C Configurable relay logic R2A 1 NO 100000 cycles Configurable relay logic R2C
Maximum switching current	Relay output R1A, R1B, R1C resistive, cos phi = 1 3 A 250 V AC Relay output R1A, R1B, R1C resistive, cos phi = 1 3 A 30 V DC Relay output R1A, R1B, R1C, R2A, R2C inductive, cos phi = 0.4 7 ms 2 A 250 V AC Relay output R1A, R1B, R1C, R2A, R2C inductive, cos phi = 0.4 7 ms 2 A 30 V DC Relay output R2A, R2C resistive, cos phi = 1 5 A 250 V AC Relay output R2A, R2C resistive, cos phi = 1 5 A 30 V DC
Minimum switching current	Relay output R1A, R1B, R1C, R2A, R2C 5 mA 24 V DC
Method of access	Slave CANopen
4 quadrant operation possible	True
Asynchronous motor control profile	Voltage/frequency ratio, 5 points Flux vector control without sensor, standard Voltage/frequency ratio - Energy Saving, quadratic U/f Flux vector control without sensor - Energy Saving Voltage/frequency ratio, 2 points
Synchronous motor control profile	Vector control without sensor
Maximum output frequency	0.599 kHz
Acceleration and deceleration ramps	Linear U S CUS Ramp switching Acceleration/deceleration ramp adaptation Acceleration/deceleration automatic stop with DC injection
Motor slip compensation	Automatic whatever the load Adjustable 0...300 % Not available in voltage/frequency ratio (2 or 5 points)
Switching frequency	2...16 kHz adjustable 4...16 kHz with derating factor
Nominal switching frequency	4 kHz
Braking to standstill	By DC injection
Brake chopper integrated	True
Line current	13.7 A 380 V heavy duty) 10.6 A 500 V heavy duty)
Maximum Input Current per Phase	13.7 A
Maximum output voltage	500 V
Apparent power	9.2 kVA 500 V heavy duty)
Network Frequency	50-60 Hz
Relative symmetric network frequency tolerance	5 %
Prospective line Isc	5 kA
Base load current at high overload	9.5 A
Power dissipation in W	Self-cooled 111 W 380 V 4 kHz
With safety function Safely Limited Speed (SLS)	True
With safety function Safe brake management (SBC/SBT)	False
With safety function Safe Operating Stop (SOS)	False

With safety function Safe Position (SP)	False
With safety function Safe programmable logic	False
With safety function Safe Speed Monitor (SSM)	False
With safety function Safe Stop 1 (SS1)	True
With sft fct Safe Stop 2 (SS2)	False
With safety function Safe torque off (STO)	True
With safety function Safely Limited Position (SLP)	False
With safety function Safe Direction (SDI)	False
Protection type	Input phase breaks drive Overcurrent between output phases and earth drive Overheating protection drive Short-circuit between motor phases drive Thermal protection drive
Width	9.8 in (250 mm)
Height	13.4 in (340 mm)
Depth	9.3 in (235.0 mm)
Product Weight	17.2 lb(US) (7.8 kg)
Transient overtorque	170…200 % of nominal motor torque

Environment

Operating position	Vertical +/- 10 degree
Product Certifications	CE ATEX NOM GOST EAC RCM KC
Marking	CE ATEX UL CSA EAC RCM
Standards	IEC 61800-5-1
Electromagnetic compatibility	Electrostatic discharge immunity test level 3 conforming to IEC 61000-4-2 Radiated radio-frequency electromagnetic field immunity test level 3 conforming to IEC 61000-4-3 Electrical fast transient/burst immunity test level 4 conforming to IEC 61000-4-4 1.2/50 µs - 8/20 µs surge immunity test level 3 conforming to IEC 61000-4-5 Conducted radio-frequency immunity test level 3 conforming to IEC 61000-4-6 Voltage dips and interruptions immunity test conforming to IEC 61000-4-11
Environmental class (during operation)	Class 3C3 according to IEC 60721-3-3 Class 3S2 according to IEC 60721-3-3
Maximum acceleration under shock impact (during operation)	150 m/s² at 11 ms
Maximum acceleration under vibrational stress (during operation)	10 m/s² at 13...200 Hz
Maximum deflection under vibratory load (during operation)	1.5 mm at 2...13 Hz
Permitted relative humidity (during operation)	Class 3K5 according to EN 60721-3
Overvoltage category	III
Regulation loop	Adjustable PID regulator

Speed accuracy	+/- 10 % of nominal slip 0.2 Tn to Tn
Pollution degree	3
Ambient air transport temperature	-13…158 °F (-25…70 °C)
Ambient air temperature for operation	14…104 °F (-10…40 °C) without derating 104…140 °F (40…60 °C) with derating factor
Ambient Air Temperature for Storage	-13…158 °F (-25…70 °C)

Ordering and shipping details

Category	US1CP4B22152
Discount Schedule	CP4B
GTIN	3606489548537
Returnability	Yes
Country of origin	ID

Packing Units

Unit Type of Package 1	PCE
Nbr. of units in pkg.	1
Package 1 Height	11.535 in (29.300 cm)
Package 1 Width	12.008 in (30.500 cm)
Package 1 Length	17.717 in (45.000 cm)
Package weight(Lbs)	21.605 lb(US) (9.800 kg)
Unit Type of Package 2	P06
Number of Units in Package 2	4
Package 2 Height	30.315 in (77.000 cm)
Package 2 Width	23.622 in (60.000 cm)
Package 2 Length	31.496 in (80.000 cm)
Package 2 Weight	105.822 lb(US) (48.000 kg)

Contractual warranty

Warranty (in months)	18

Environmental Data

Schneider Electric aims to achieve Net Zero status by 2050 through supply chain partnerships, lower impact materials, and circularity via our ongoing “Use Better, Use Longer, Use Again” campaign to extend product lifetimes and recyclability.

Environmental Data explained >

How we assess product sustainability >

Environmental footprint

Total lifecycle Carbon footprint	**2 127 kg CO2 eq.**
Carbon footprint of the manufacturing phase [A1 to A3]	**281 kg CO2 eq.**
Carbon footprint of the distribution phase [A4]	**2 kg CO2 eq.**
Carbon footprint of the installation phase [A5]	**5 kg CO2 eq.**
Carbon footprint of the use phase [B2, B3, B4, B6]	**1 831 kg CO2 eq.**
Carbon footprint of the end-of-life phase [C1 to C4]	**8 kg CO2 eq.**
Environmental Disclosure	Product Environmental Profile

Use Better

Materials and Substances

Packaging made with recycled cardboard	**Yes**
Packaging without single use plastic	**Yes**
SCIP Number	**6c9270b7-d1a3-4f04-92c5-df834356f889**
EU RoHS Directive	Compliant By Exemption
REACh Regulation	Reference contains Substances of Very High Concern above the threshold
California proposition 65	**WARNING: This product can expose you to chemicals including: Lead and lead compounds, which is known to the State of California to cause cancer and birth defects or other reproductive harm. For more information go to www.P65Warnings.ca.gov**

Energy efficiency

Product contributes to saved and avoided emissions	**Yes**

Use Longer

Lifetime extension

Repair	**No**

Use Again

Repack and remanufacture

Recyclability potential, in %	**83**
Circularity Profile	End of Life Information
Take-back	**No**

WEEE Label	The product must be disposed on European Union markets following specific waste collection and never end up in rubbish bins.

Dimensions Drawings

Dimensions

Front and Left View

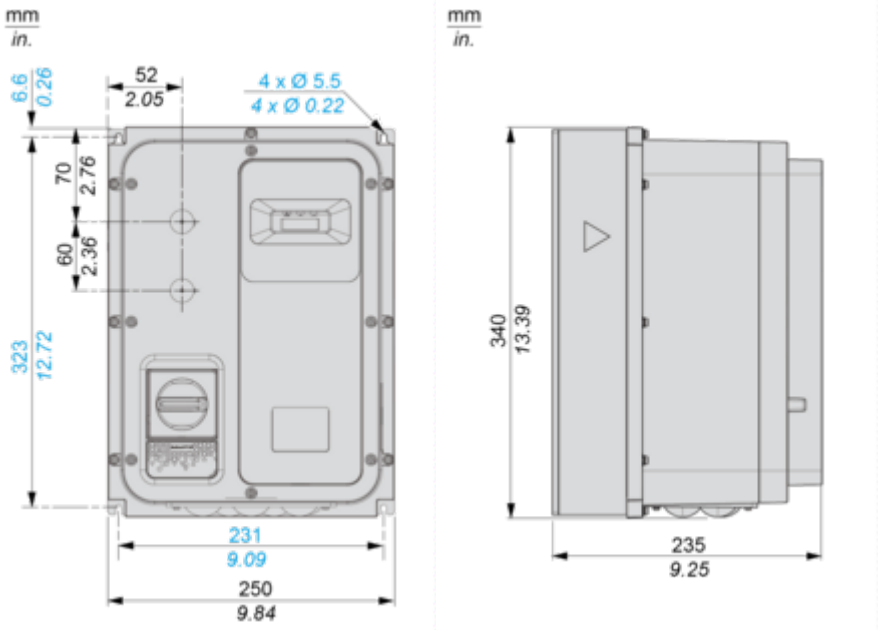

Mounting and Clearance

Mounting and Clearance

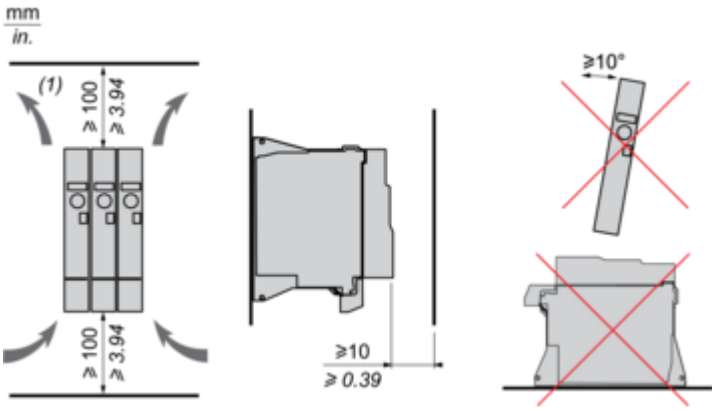

(1) Minimum value corresponding to thermal constraints.

Connections and Schema

Connection Diagrams

Single or Three-phase Power Supply - Diagram With Line Contactor

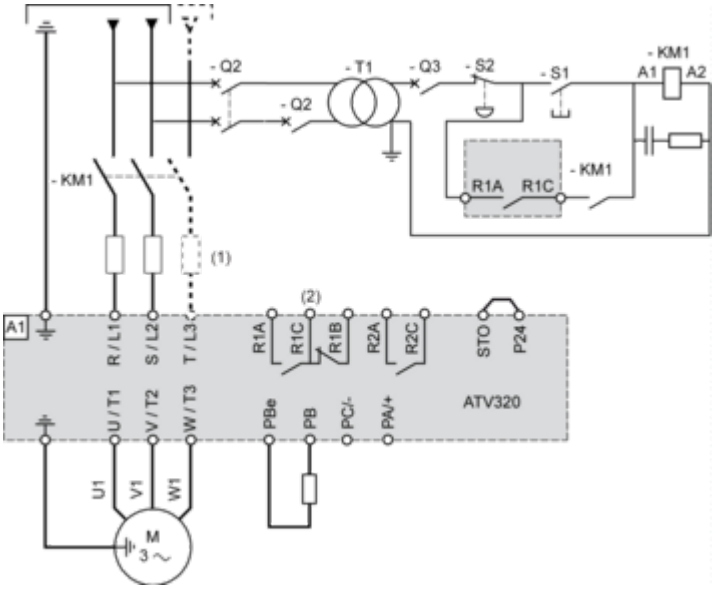

(1) Line choke (if used)
(2) Use relay output R1 set to operating state Fault to switch Off the product once an error is detected.

Single or Three-phase Power Supply - Diagram With Downstream Contactor

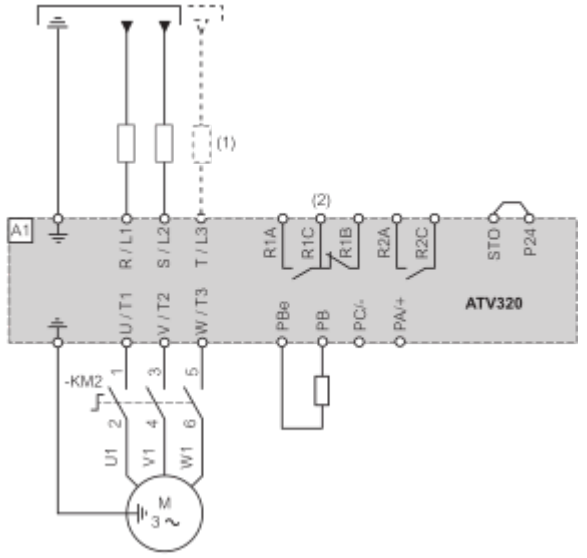

(1) Line choke (if used)
(2) Use relay output R1 set to operating state Fault to switch Off the product once an error is detected.

Control Block Wiring Diagram

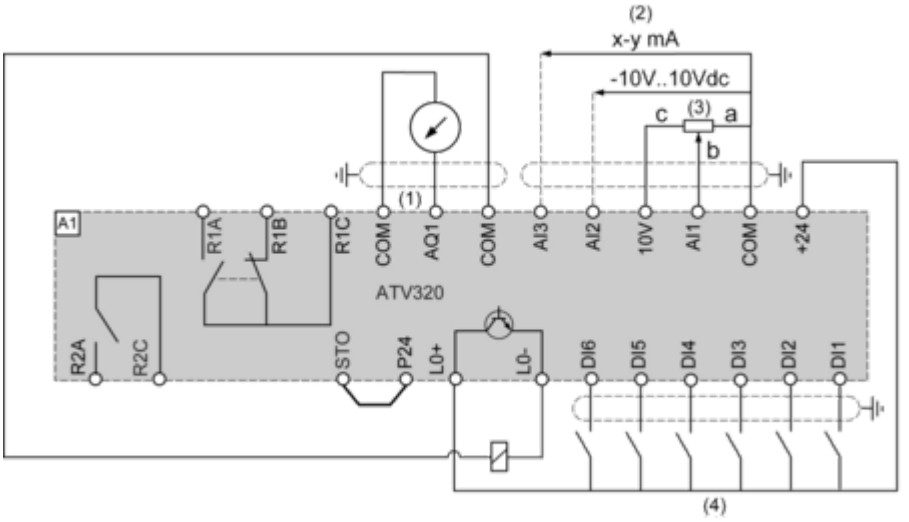

(1) Analog output
(2) Analog inputs
(3) Potentiometer SZ1RV1202 (2.2 kΩ) or similar (10 kΩ maximum)
(4) Digital Inputs - Shielding instructions are given in the Electromagnetic Compatibility section

Digital Inputs Wiring

Switch Set to SRC (Source) Position Using the Output Power Supply for the Digital Inputs

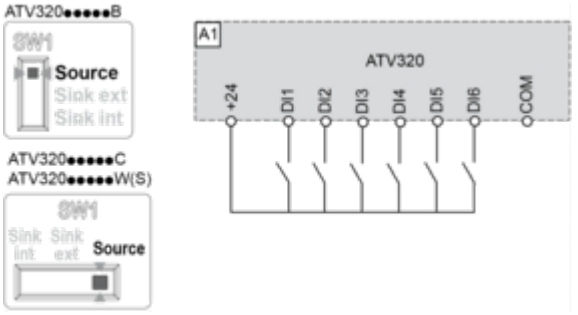

Switch Set to SRC (Source) Position and Use of an External Power Supply for the Digital Inputs

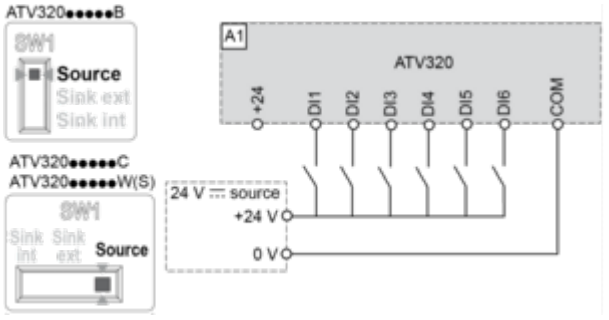

Switch Set to SK (Sink) Position Using the Output Power Supply for the Digital Inputs

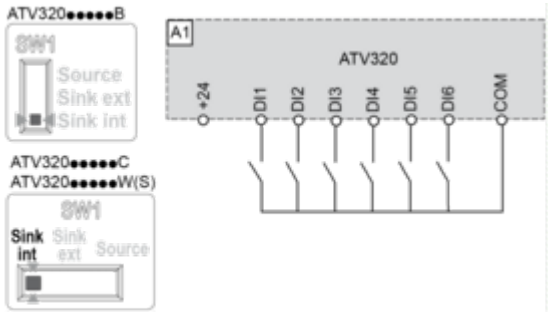

Switch Set to EXT Position Using an External Power Supply for the Digital Inputs

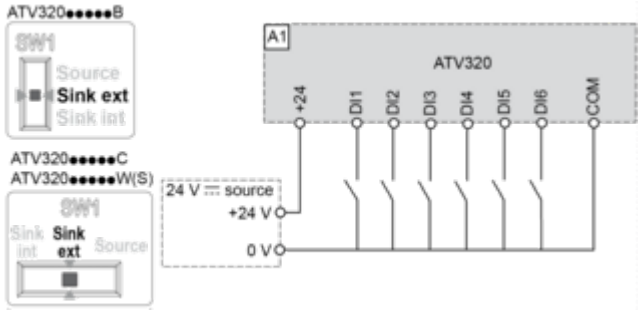

NOTE :

• STO input is also connected by default on a 24 Vdc terminal. If the external power supply is switched off, the function STO will be triggered.

• To avoid triggering the STO function when switching-on the product, the external power supply must be previously switched on.

Performance Curves

Derating Curves

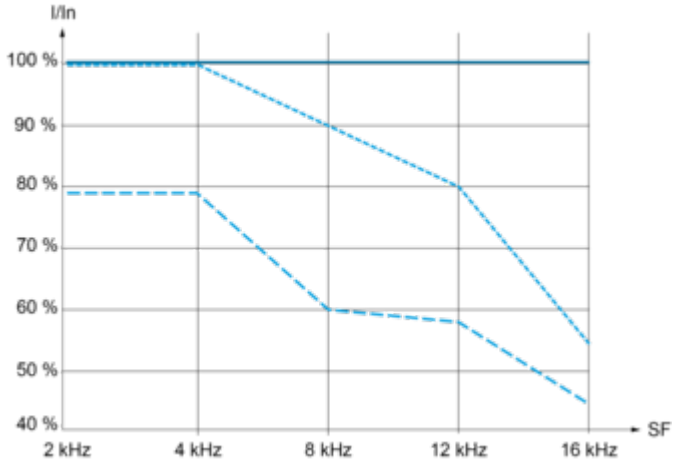

40 °C (104 °F)
50 °C (122 °F)
60 °C (140 °F)

In : Nominal Drive Current
SF : Switching Frequency

Technical Illustration

Dimensions

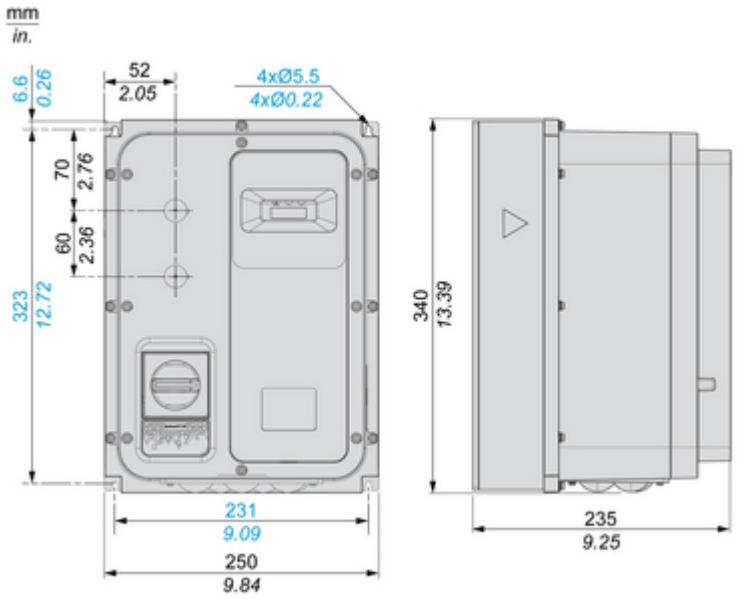

Image of product / Alternate images

Alternative






PID Control
Off
Auto
Manual
Speed
Schneider Electric
DANGER


Direction
Off
Auto
Manual
Control
Schneider Electric
DANGER


PID Control
Auto
Off
Manual
Speed
Schneider Electric
DANGER


MODE
Emergency Stop
Schneider Electric
DANGER