Product data sheet

Specifications



touch panel screen, Harmony STO & STU, 4.3inch wide, RS 232 terminal block

HMISTO705

Product availability: Stock - Normally stocked in distribution facility

Main

Range of Product	Harmony STO & STU
Product or Component Type	Touch panel screen
Software package	EcoStruxure Operator Terminal Expert
Processor name	ARM926EJ-S

Complementary

Display size	4.3 inch
Display Type	Colour TFT LCD
Display colour	65536 colours
Display Resolution	480 x 272 pixels
Touch panel	Analogue
Backlight lifespan	50000 hours white
Brightness	16 levels via touch panel
Character font	ASCII (European characters) Chinese (simplified Chinese) Korean Japanese (ANK, Kanji) Cyrillic Taiwanese (traditional Chinese)
[Us] rated supply voltage	12...24 V DC - 10...20 %
Power Consumption in W	7.5 W
Number of pages	8999
Memory description	Back up of data 512 KB Application memory 26 MB
Integrated connection type	1 USB 2.0 type mini B 1 USB 2.0 type A 1 serial link - 9-pin terminal block - RS232C 2400...115200 bps)
Supply	External source
Realtime clock	With RTC-battery set optional
Downloadable protocols	Third party protocols Modbus
Range Compatibility	MitsubishI Siemens Omron Allen-Bradley
Fixing mode	By 2 installation fasteners 1.5 to 6 mm thick panel
Enclosure Material	PPT

Price is “List Price” and may be subject to a trade discount – check with your local distributor or retailer for actual price.

Disclaimer: This documentation is not intended as a substitute for and is not to be used for determining suitability or reliability of these products for specific user applications

Front material	Plastic
Cut-out dimensions	77.5 x 112.5 mm 66 x 105 mm with mounting adaptor
Height	3.6 in (90.4 mm)
Width	4.9 in (124.9 mm)
Depth	1.5 in (38.8 mm)
Product Weight	0.49 lb(US) (0.22 kg)

Environment

Standards	ANSI/ISA 12.12.01 CSA C22.2 No 142 EN 61000-6-2 CSA C22.2 No 213 UL 61010-1 EN 61131-2 EN 61000-6-4 UL 61010-2-201
Product Certifications	KCC CE UL C-tick ATEX zone 2/22 cUL UKCA
Ambient Air Temperature for Operation	32…122 °F (0…50 °C)
Ambient Air Temperature for Storage	-4…140 °F (-20…60 °C)
Relative humidity	10…90 % without condensation
Operating altitude	6561.68 ft (2000 m)
IP degree of protection	IP65f front panel) IP20 rear panel)
NEMA degree of protection	NEMA 4X/13 front panel indoor use)
Shock resistance	15 gn 11 msIEC 61131-2
Vibration resistance	1 gn 5…150 Hz) IEC 61131-2 3.5 mm constant amplitude 5…150 Hz) IEC 61131-2
Electromagnetic compatibility	Resistance to radiated electromagnetic fields - test level: 10 V/m (80 MHz...2.7 GHz) Resistance to electrostatic discharge - test level: 8 kV level 3 (air discharge) conforming to EN 61000-4-2 Resistance to electrostatic discharge - test level: 6 kV level 3 (direct contact) conforming to EN 61000-4-2

Ordering and shipping details

Category	US10MC222569
Discount Schedule	0MC2
GTIN	3606480920899
Returnability	Yes
Country of origin	CN

Packing Units

Unit Type of Package 1	PCE
Nbr. of units in pkg.	1
Package 1 Height	3.150 in (8.000 cm)

Package 1 Width	5.315 in (13.500 cm)
Package 1 Length	7.165 in (18.200 cm)
Package weight(Lbs)	18.483 oz (524.000 g)
Unit Type of Package 2	S03
Number of Units in Package 2	12
Package 2 Height	11.811 in (30.000 cm)
Package 2 Width	11.811 in (30.000 cm)
Package 2 Length	15.748 in (40.000 cm)
Package 2 Weight	14.952 lb(US) (6.782 kg)

Contractual warranty

Warranty (in months)	18

Environmental Data

Schneider Electric aims to achieve Net Zero status by 2050 through supply chain partnerships, lower impact materials, and circularity via our ongoing “Use Better, Use Longer, Use Again” campaign to extend product lifetimes and recyclability.

Environmental Data explained >

How we assess product sustainability >

Environmental footprint

Total lifecycle Carbon footprint	**637 kg CO2 eq.**
Carbon footprint of the manufacturing phase [A1 to A3]	**27 kg CO2 eq.**
Carbon footprint of the distribution phase [A4]	**0.1 kg CO2 eq.**
Carbon footprint of the installation phase [A5]	**0.2 kg CO2 eq.**
Carbon footprint of the use phase [B2, B3, B4, B6]	**610 kg CO2 eq.**
Carbon footprint of the end-of-life phase [C1 to C4]	**0.3 kg CO2 eq.**
Environmental Disclosure	Product Environmental Profile

Use Better

Materials and Substances

F-gas usage performance	**Only air and vacuum used for insulation / breaking, no F-gas including SF6**
Packaging made with recycled cardboard	**Yes**
Packaging without single use plastic	**No**
SCIP Number	**7155ec3f-2b83-4049-8830-d31f9c3341be**
EU RoHS Directive	Compliant By Exemption
REACh Regulation	Reference contains Substances of Very High Concern above the threshold
California proposition 65	**WARNING: This product can expose you to chemicals including: Lead and lead compounds, which is known to the State of California to cause cancer and birth defects or other reproductive harm. For more information go to www.P65Warnings.ca.gov**
Halogen content performance	**Product contains halogen above thresholds**
PVC free	**No**
Silicon free	**No**

Use Longer

Lifetime extension

Repair	**No**

Use Again

Repack and remanufacture

Recyclability potential, in %	**17**

Circularity Profile	End of Life Information
Take-back	No
WEEE Label	The product must be disposed on European Union markets following specific waste collection and never end up in rubbish bins.

Dimensions Drawings

External Dimensions

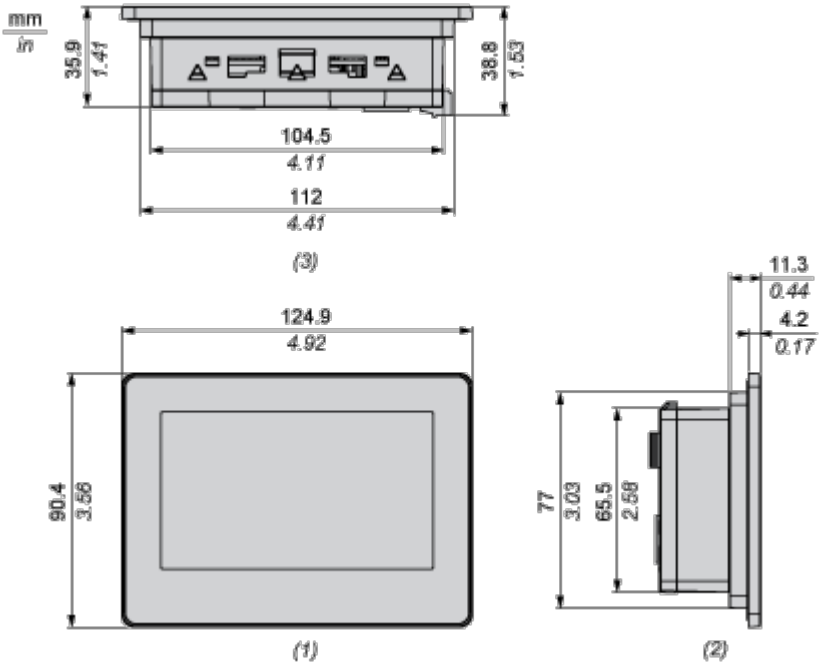

1 Front

2 Left

3 Bottom

Dimensions with Installation Fasteners

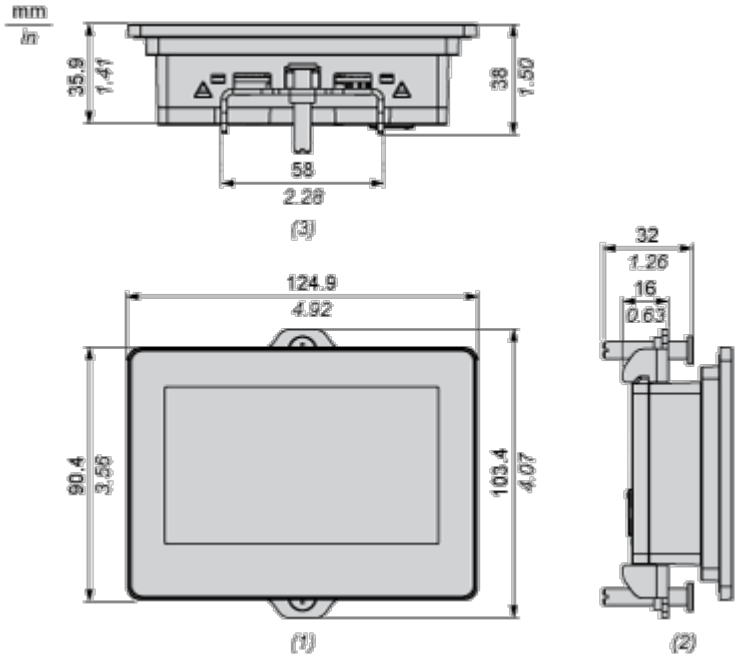

1 Front

2 Left

3 Bottom

Mounting and Clearance

Mounting

Panel Cut-out Dimensions

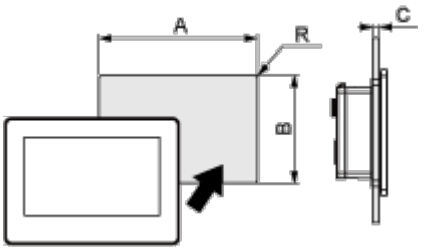

Dimensions in mm

Description	A	B	C	R
Without adapter	112.5	77.5	1.5...6	3 max.
With adapter	105	66	1.5...6	3 max.

Dimensions in in.

Description	A	B	C	R
Without adapter	4.43	3.05	0.06...0.24	0.12 max.
With adapter	4.13	2.6	0.06...0.24	0.12 max.

Installation Requirements

Mounting Angle

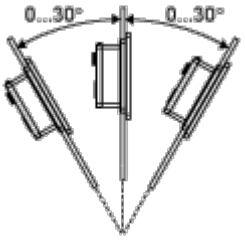

When installing this product in a slanted position with an incline more than 30°, the ambient temperature must not exceed 40 °C (104 °F). You may need to use forced air cooling (fan, A/C) to ensure the ambient operating temperature is 40 °C or less (104 °F or less).

Clearance

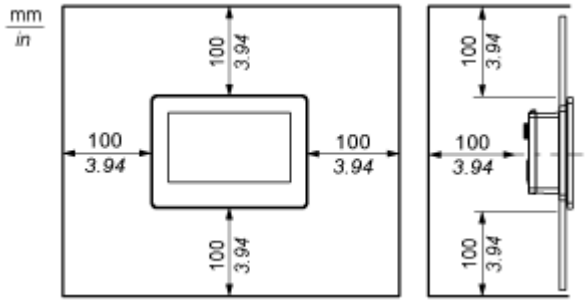

Offer Marketing Illustration

Product benefits / Features

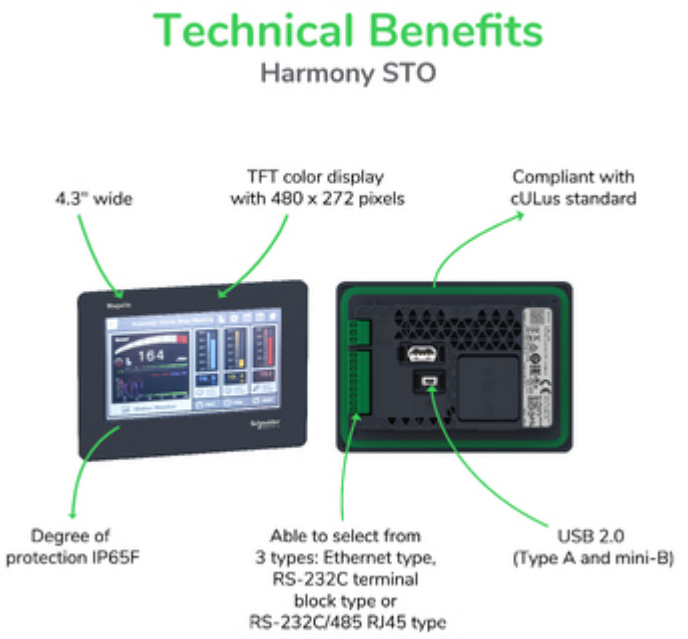

Offer Marketing Illustration

Product benefits / Features



Image of product / Alternate images

Alternative



