Product data sheet

Specifications



single phase relay, Harmony Solid State Relays, 25A, DIN rail mount, zero voltage switching, input 90 to 280V AC, output 24 to 300V AC

SSP1A125M7

Product availability: Stock - Normally stocked in distribution facility

Main

Range of Product	Harmony Solid State Relays
Product or Component Type	Panel mount relay
Device short name	SSP1
Mounting Support	Panel
Number of phases	1 phase
Line Rated Current	25 A
Solid state output type	SCR output Zero voltage switching
Output switching mode	Zero voltage switching

Complementary

test button	Without test button
[Uc] control circuit voltage	90...280 V AC
Minimum switching voltage	90 V AC turn-on
Maximum switching voltage	10 V AC turn-off
Response time	30 ms (turn-off) 25 ms (turn-on)
Input current	5…10 mA
Output voltage	24...300 V AC
Load current	0.15…25 A
Transient overvoltage	600 V
Surge current	250 A 16.6 ms
Maximum I²t for fusing	259 A².s for 8.33 ms at 60 Hz 285 A².s for 10 ms at 50 Hz
Co-ordination type	Type 1 - 25 A miniature circuit breaker (MCB) B Type 2 - 20 A miniature circuit breaker (MCB) B
Maximum leakage current	1 mA off-state
Maximum voltage drop	<1.15 V on-state
DV/dt	500 V/µs off-state at maximum voltage
Power factor	0.5 (with maximum load)
Motor controller rating	0.5 hp 120 V AC 1 hp 240 V AC
Insulation resistance	1000 MOhm at 500 V DC

Price is “List Price” and may be subject to a trade discount – check with your local distributor or retailer for actual price.

Disclaimer: This documentation is not intended as a substitute for and is not to be used for determining suitability or reliability of these products for specific user applications

Maximum capacitance	8 pF for input/output
Dielectric strength	4 kV AC for input/output 4 kV AC for input or output to case
[Uimp] rated impulse withstand voltage	6 kV output to case 6 kV input to output
Tightening torque	1.5...1.7 N.m for input 2...2.2 N.m for output
Connections - terminals	Screw terminals 0.2...3.3 mm², AWG 24...AWG 12) with cable end input Screw terminals 0.5...5.26 mm², AWG 20...AWG 10) with cable end output Screw terminals 0.2...3.3 mm², AWG 24...AWG 12) without cable end input Screw terminals 0.5...8.26 mm², AWG 20...AWG 8) without cable end output Forked type tag connectors 9.2 x 4 mm input Ring lugs 9.2 x 4 mm input Forked type tag connectors 11.7 x 4.5 mm output Ring lugs 11.7 x 4.5 mm output
Thermal resistance	0.8 °C/W junction to case
LED indicator	LED, green input
IP degree of protection	IP20
Safety reliability data	B10d = 1731395 MTTFd = 1875.9 years
Product Weight	3.1 oz (89.2 g)
Device presentation	Complete product

Environment

Ambient Air Temperature for Operation	-40…176 °F (-40…80 °C)
Ambient Air Temperature for Storage	-40…257 °F (-40…125 °C)
Pollution degree	2
Overvoltage category	III
Product Certifications	CE CSA UL EAC
Marking	CE EAC CSA UL
Standards	IEC 62314 UL 508 IEC 60950-1 CSA C22.2 No 14-13

Ordering and shipping details

Category	US10CP222375
Discount Schedule	0CP2
GTIN	3606485441931
Returnability	Yes
Country of origin	MX

Packing Units

Unit Type of Package 1	PCE
Nbr. of units in pkg.	1

Package 1 Height	1.5 in (3.8 cm)
Package 1 Width	1.9 in (4.8 cm)
Package 1 Length	2.6 in (6.7 cm)
Package weight(Lbs)	3.5 oz (98.0 g)
Unit Type of Package 2	S01
Number of Units in Package 2	30
Package 2 Height	5.9 in (15.0 cm)
Package 2 Width	5.9 in (15.0 cm)
Package 2 Length	15.7 in (40.0 cm)
Package 2 Weight	7.14 lb(US) (3.24 kg)

Contractual warranty

Warranty (in months)	18

Environmental Data

Schneider Electric aims to achieve Net Zero status by 2050 through supply chain partnerships, lower impact materials, and circularity via our ongoing “Use Better, Use Longer, Use Again” campaign to extend product lifetimes and recyclability.

Environmental Data explained >

How we assess product sustainability >

Environmental footprint

Total lifecycle Carbon footprint	**2 824 kg CO2 eq.**
Carbon footprint of the manufacturing phase [A1 to A3]	**1 kg CO2 eq.**
Carbon footprint of the distribution phase [A4]	**0 kg CO2 eq.**
Carbon footprint of the installation phase [A5]	**0 kg CO2 eq.**
Carbon footprint of the use phase [B2, B3, B4, B6]	**2 823 kg CO2 eq.**
Carbon footprint of the end-of-life phase [C1 to C4]	**0 kg CO2 eq.**
Environmental Disclosure	**Product Environmental Profile**

Use Better

Materials and Substances

Packaging made with recycled cardboard	**Yes**
Packaging without single use plastic	**Yes**
SCIP Number	**134201bc-d293-4667-9cca-10a7f11729e0**
EU RoHS Directive	**Compliant By Exemption**
REACh Regulation	**Reference contains Substances of Very High Concern above the threshold**
California proposition 65	**WARNING: This product can expose you to chemicals including: Lead and lead compounds, which is known to the State of California to cause cancer and birth defects or other reproductive harm. For more information go to www.P65Warnings.ca.gov**

Use Longer

Lifetime extension

Repair	**No**

Use Again

Repack and remanufacture

Circularity Profile	**End of Life Information**
Take-back	**No**

Dimensions Drawings

Dimensions

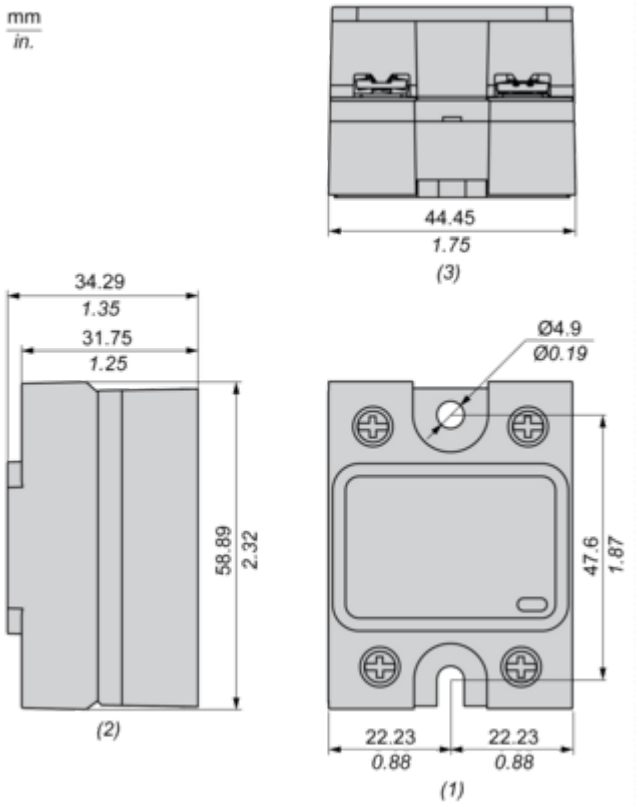

(1) Front view
(2) Side view
(3) Bottom view

Performance Curves

Derating Curves

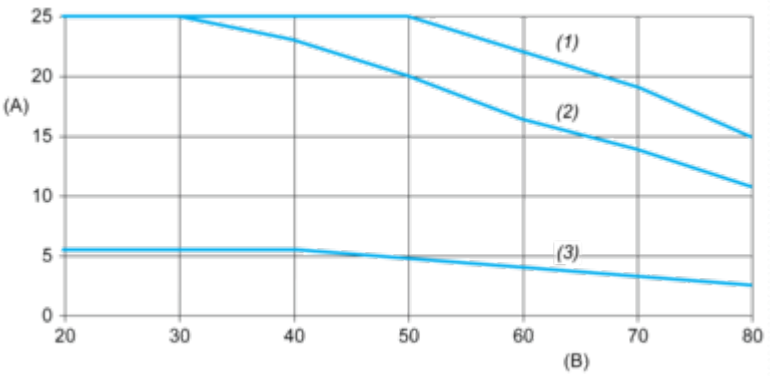

A : Load Current (Arms)
B : Ambient Temperature (°C)
(1) For Heatsink SSRHP17
(2) For Heatsink SSRHP25
(3) No Heatsink

Technical Illustration

Dimensions

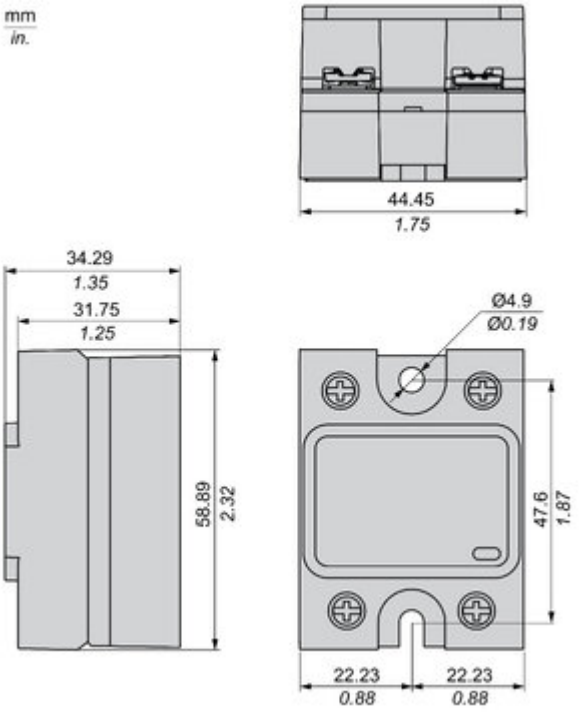

Image of product / Alternate images

Alternative







