Product data sheet
Characteristics

SSM1A445BD
Harmony, Solid state modular relay, 45 A, DIN rail mount, zero voltage switching, input 4…32 V DC, output 48…660 V AC



Main

Range of Product	Harmony Solid State Relays
Product or Component Type	Solid state relay up to 50 A
Device short name	SSM1
Number of phases	1 phase
Output switching mode	Zero voltage switching

Complementary

Mounting Support	Symmetrical DIN rail
Line Rated Current	45 A
Output voltage	48...660 V AC
[Uc] control circuit voltage	4...32 V DC
Tightening torque	0.6...0.7 N.m for input 1.36...1.7 N.m for output
Connections - terminals	Screw terminals 1 x 0.2...1 x 3.3 mm², AWG 24...AWG 12) input Screw terminals 1 x 0.2...1 x 8.4 mm², AWG 24...AWG 8) output
Maximum capacitance	8 pF for input/output
Insulation resistance	1000 MOhm at 500 V DC
Local signalling	For input status LED (green)
Switching voltage	4 V DC turn-on 1 V DC turn-off
Input current	14…17 mA
Solid state output type	Zero voltage switching SCR output
Load current	0.15…45 A
Transient overvoltage	1200 V
Surge current	625 A 16.6 ms
Maximum voltage drop	<1.7 V on-state
Maximum I²t for fusing	1620 A².s for 8.3 ms
Maximum leakage current	1 mA off-state
DV/dt	500 V/µs off-state at maximum voltage
Response time	0.5 cycle (turn-on) 0.5 cycle (turn-off)
Overvoltage category	III
Net Weight	1.05 lb(US) (0.476 kg)

The information provided in this documentation contains general descriptions and/or technical characteristics of the performance of the products contained herein.
This documentation is not intended as a substitute for and is not to be used for determining suitability or reliability of these products for specific user applications.
It is the duty of any such user or integrator to perform the appropriate and complete risk analysis, evaluation and testing of the products with respect to the relevant specific application or use thereof.
Neither Schneider Electric Industries SAS nor any of its affiliates or subsidiaries shall be responsible or liable for misuse of the information contained herein.

Environment

Dielectric strength	4 KV AC for input/output 4 kV AC for input or output to case
Pollution degree	2
Standards	IEC 60950-1 CSA C22.2 No 14 UL 508
Product Certifications	EAC CSA UL
Marking	CE CSA EAC UL
IP degree of protection	IP20
Ambient Air Temperature for Operation	-40…176 °F (-40…80 °C)
Ambient Air Temperature for Storage	-40…257 °F (-40…125 °C)

Ordering and shipping details

Category	22375-INTERFACE MODULE(ABA,R,S)
Discount Schedule	CP2
GTIN	3606485441665
Returnability	No
Country of origin	MX

Packing Units

Unit Type of Package 1	PCE
Number of Units in Package 1	1
Package 1 Height	2.36 in (6.0 cm)
Package 1 Width	4.53 in (11.5 cm)
Package 1 Length	4.65 in (11.8 cm)
Package 1 Weight	18.38 oz (521.0 g)
Unit Type of Package 2	S02
Number of Units in Package 2	12
Package 2 Height	5.91 in (15.0 cm)
Package 2 Width	11.81 in (30.0 cm)
Package 2 Length	15.75 in (40.0 cm)
Package 2 Weight	14.80 lb(US) (6.714 kg)

Offer Sustainability

California proposition 65	WARNING: This product can expose you to chemicals including: Lead and lead compounds, which is known to the State of California to cause cancer and birth defects or other reproductive harm. For more information go to www.P65Warnings.ca.gov
REACh Regulation	REACh Declaration
EU RoHS Directive	Pro-active compliance (Product out of EU RoHS legal scope) EU RoHS Declaration
Mercury free	Yes
China RoHS Regulation	China RoHS Declaration
RoHS exemption information	Yes

Dimensions

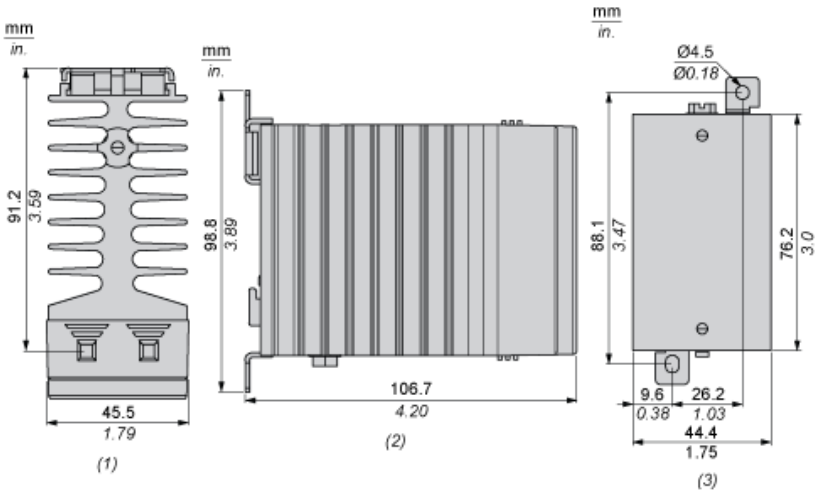

(1) Top view
(2) Side view
(3) Front view

SSM1A445BD

Derating Curves

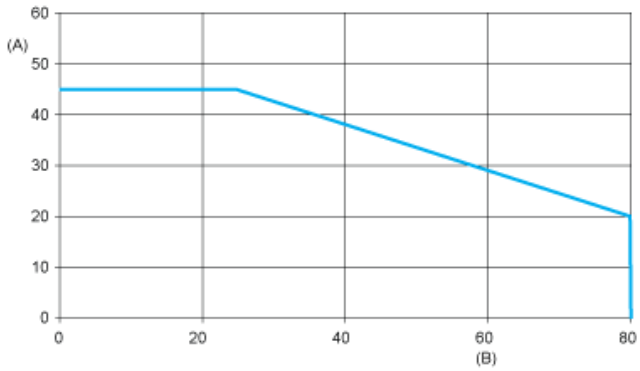

A : Load Current (Amperes)
B : Ambient Temperature (°C)