Product data sheet
Characteristics

HMIPSPH752D1801
S-Panel PC Performance HDD W15 DC Windows 10



Main

Range of Product	Harmony iPC
Product or Component Type	Multi-touch screen
Processor Name	Intel Core i3 4010U 1.7 GHz
Chipset type	Intel QM87
Free slots	1 Internal SATA HDD/SSD 1 CFast
Display size	15.6 inch
Display colour	16777216 colors
Luminance	27.87 fc (300 cd/m²)
Pixel resolution	4096 x 4096
Video controller type	Intel HD Graphics 4400
Operating system	Windows 10 IoT Enterprise 64 bitmulti-language
Software package	EcoStruxture secure connect advisor annual subscription cyber security license not included EcoStruxure Operator Terminal Expert run time HMI license not included EcoStruxure Machine SCADA Expert run time HMI/ SCADA on configured offer only EcoStruxure augmented operator advisor server augmented operator license not included

Complementary

Number of points	5
Terminal type	Touchscreen display
Memory type	8 GB RAM DDR3 internal
Data storage equipment	500 GB back side enterprise hard disk
Aspect ratio	16:9
Display Type	Colour TFT LCD LED
Display Resolution	1366 x 768 pixels WXGA
Backlight lifespan	50000 hours
View angle horizontal x vertical	160 x 170°
Touch panel	Projected capacitive technology (PCT)
Type of cooling	Fanless Passive
Watchdog timer	1…255 ms
Number of slots	1 mini PCI Express full-size
[Us] rated supply voltage	24 V DC +/- 20 % 100...240 V AC with additional adaptor HMIYPSPMAC1
Power Consumption in W	18…60 W
Mechanical robustness	Hardness anti-scratch 7H
Function Available	Operate with water on screen
Width	16.52 in (419.7 mm)
Height	10.59 in (269 mm)
Depth	2.23 in (56.7 mm)
Cut-out dimensions	412.4 (+/- 0.7) x 261.7 (+/- 0.4)
Net Weight	13.23 lb(US) (6 kg)
Display size	15" wide multi-touch
Main type	Performance

The information provided in this documentation contains general descriptions and/or technical characteristics of the performance of the products contained herein.
This documentation is not intended as a substitute for and is not to be used for determining suitability or reliability of these products for specific user applications.
It is the duty of any such user or integrator to perform the appropriate and complete risk analysis, evaluation and testing of the products with respect to the relevant specific application or use thereof.
Neither Schneider Electric Industries SAS nor any of its affiliates or subsidiaries shall be responsible or liable for misuse of the information contained herein.

Environment

IP degree of protection	Front panel IP66
Product Certifications	CCC EAC RCM C-tick AS/NZS CE
Standards	IEC 61000-6-4 UL 60950 CSA C22.2 No. 60950 IEC 60950 FCC Part 15 class A CISPR 11 IEC 61000-6-2
Directives	2006/95/EC - low voltage directive 2004/108/EC - electromagnetic compatibility
Pollution degree	2
Ambient air temperature for operation	32…131 °F (0…55 °C) SSD 32…131 °F (0…55 °C) Cfast card 32…113 °F (0…45 °C) HDD
Ambient air temperature for storage	-4…140 °F (-20…60 °C)
Relative Humidity	10…95 % non-condensing
Operating altitude	2000
Vibration resistance	1 gn 5…500 Hz)HDD

Ordering and shipping details

Category	22575-MAGELIS MC3
Discount Schedule	MC3
GTIN	3606480795497
Returnability	No
Country of origin	US

Packing Units

Unit Type of Package 1	PCE
Number of Units in Package 1	1
Package 1 Height	2.24 in (5.7 cm)
Package 1 Width	10.59 in (26.9 cm)
Package 1 Length	16.54 in (42.0 cm)
Package 1 Weight	16.53 lb(US) (7.5 kg)
Unit Type of Package 2	CAR
Number of Units in Package 2	1
Package 2 Height	20.67 in (52.5 cm)
Package 2 Width	7.09 in (18.0 cm)
Package 2 Length	27.76 in (70.5 cm)
Package 2 Weight	16.53 lb(US) (7.5 kg)

Offer Sustainability

California proposition 65	WARNING: This product can expose you to chemicals including: Lead and lead compounds, which is known to the State of California to cause cancer and birth defects or other reproductive harm. For more information go to www.P65Warnings.ca.gov
EU RoHS Directive	Not applicable, out of EU RoHS legal scope
Mercury free	Yes
China RoHS Regulation	China RoHS Declaration
WEEE	The product must be disposed on European Union markets following specific waste collection and never end up in rubbish bins.

HMIPSPH752D1801

Dimensions

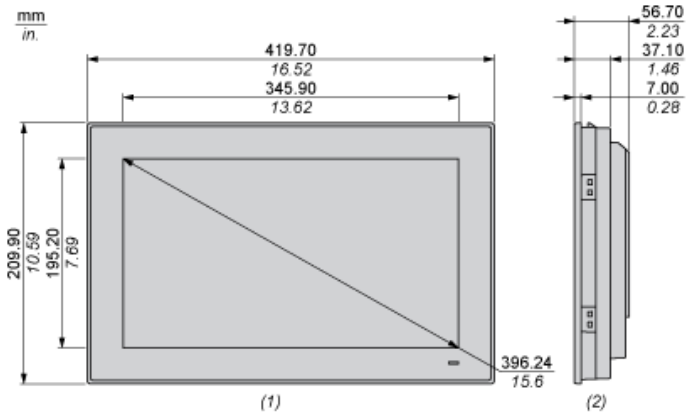

(1) Front view
(2) Side view

Spacing Requirements

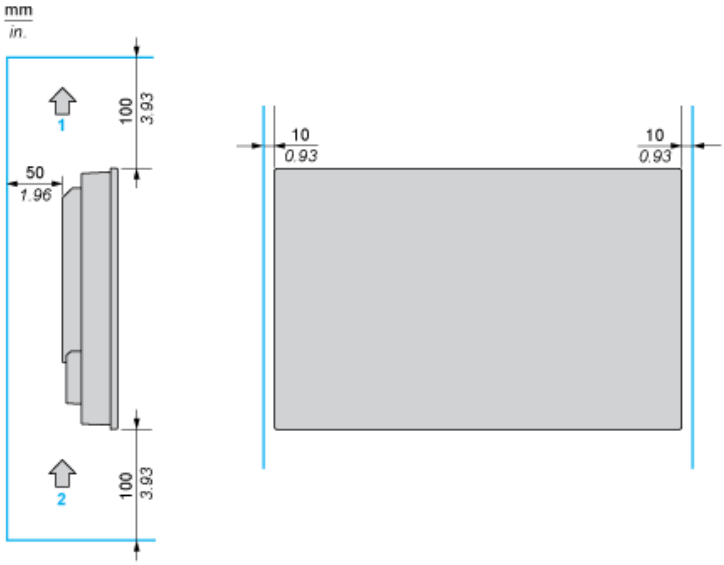

(1) Air out
(2) Air in

Mounting Orientation

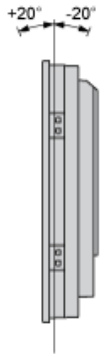

Panel Cut Dimensions

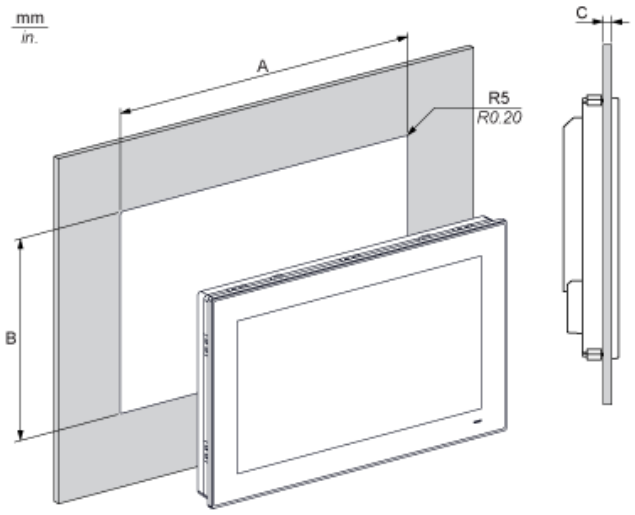

A	B	C	R
412.4 ±0.7 mm (16.24 ±0.03 in)	261.7 ±0.4 mm (10.30 ±0.02 in)	2...6 mm (0.08...0.23 in)	5 mm (0.20 in)