Product data sheet

Specifications



single phase relay, Harmony Solid State Relays, 12A, panel mount, DC switching, thermal pad, input 3.5 to 32V DC, output 1 to 150V DC

SSP1D412BDT

Product availability: Stock - Normally stocked in distribution facility

Main

Range of Product	Harmony Solid State Relays
Provided accessory	Thermal pad
Product or Component Type	Panel mount relay
Device short name	SSP1
Mounting Support	Panel
Number of phases	1 phase
Line Rated Current	12 A
Solid state output type	DC switching Mosfet output
Output switching mode	DC switching

Complementary

test button	Without test button
[Uc] control circuit voltage	3.5...32 V DC
Minimum switching voltage	3.5 V DC turn-on
Maximum switching voltage	1 V DC turn-off
Response time	0.1 ms (turn-on) 0.1 ms (turn-off)
Input current	10…15 mA
Output voltage	1...150 V DC
Load current	0.001…12 A
Surge current	31 A 10 ms
Co-ordination type	Type 1 - 10 A miniature circuit breaker (MCB) B Type 2 - 6 A miniature circuit breaker (MCB) B
Maximum leakage current	0.3 mA off-state
Maximum voltage drop	<2.8 V on-state
Insulation resistance	1000 MOhm at 500 V DC
Maximum capacitance	50 pF for input/output
Dielectric strength	2.5 kV AC for input/output 2.5 kV AC for input or output to case
[Uimp] rated impulse withstand voltage	2.5 kV output to case
Tightening torque	1.5...1.7 N.m for input 2...2.2 N.m for output

Price is “List Price” and may be subject to a trade discount – check with your local distributor or retailer for actual price.

Disclaimer: This documentation is not intended as a substitute for and is not to be used for determining suitability or reliability of these products for specific user applications

Connections - terminals	Screw terminals 0.2...3.3 mm², AWG 24...AWG 12) with cable end input Screw terminals 0.5...5.26 mm², AWG 20...AWG 10) with cable end output Screw terminals 0.2...3.3 mm², AWG 24...AWG 12) without cable end input Screw terminals 0.5...8.26 mm², AWG 20...AWG 8) without cable end output Forked type tag connectors 9.2 x 4 mm input Ring lugs 9.2 x 4 mm input Forked type tag connectors 11.7 x 4.5 mm output Ring lugs 11.7 x 4.5 mm output
Thermal resistance	0.71 °C/W junction to case
thermal pad impedance	0.48 °C-in²/W at 25 psi
LED indicator	LED, green input
IP degree of protection	IP20
Safety reliability data	MTTFd = 1875.9 years B10d = 1731395
Product Weight	3.1 oz (89.2 g)
Device presentation	Complete product

Environment

Ambient Air Temperature for Operation	-40…176 °F (-40…80 °C)
Ambient Air Temperature for Storage	-40…257 °F (-40…125 °C)
Pollution degree	2
Overvoltage category	III
Product Certifications	CE UL EAC CSA
Marking	CE UL EAC CSA
Standards	IEC 62314 UL 508 IEC 60950-1 CSA C22.2 No 14-13

Ordering and shipping details

Category	US10CP222375
Discount Schedule	0CP2
GTIN	3606485442006
Returnability	Yes
Country of origin	MX

Packing Units

Unit Type of Package 1	PCE
Nbr. of units in pkg.	1
Package 1 Height	1.5 in (3.8 cm)
Package 1 Width	1.9 in (4.8 cm)
Package 1 Length	2.6 in (6.5 cm)
Package weight(Lbs)	3.4 oz (95.0 g)
Unit Type of Package 2	S01

Number of Units in Package 2	30
Package 2 Height	5.9 in (15.0 cm)
Package 2 Width	5.9 in (15.0 cm)
Package 2 Length	15.7 in (40.0 cm)
Package 2 Weight	6.971 lb(US) (3.162 kg)

Contractual warranty

Warranty (in months)	18

Environmental Data

Schneider Electric aims to achieve Net Zero status by 2050 through supply chain partnerships, lower impact materials, and circularity via our ongoing “Use Better, Use Longer, Use Again” campaign to extend product lifetimes and recyclability.

Environmental Data explained >

How we assess product sustainability >

Environmental footprint

Total lifecycle Carbon footprint	**3 057 kg CO2 eq.**
Carbon footprint of the manufacturing phase [A1 to A3]	**1 kg CO2 eq.**
Carbon footprint of the distribution phase [A4]	**0 kg CO2 eq.**
Carbon footprint of the installation phase [A5]	**0 kg CO2 eq.**
Carbon footprint of the use phase [B2, B3, B4, B6]	**3 056 kg CO2 eq.**
Carbon footprint of the end-of-life phase [C1 to C4]	**0 kg CO2 eq.**
Environmental Disclosure	**Product Environmental Profile**

Use Better

Materials and Substances

Packaging made with recycled cardboard	**Yes**
Packaging without single use plastic	**Yes**
EU RoHS Directive	**Compliant**
REACh Regulation	**Free of Substances of Very High Concern above the threshold**
California proposition 65	**WARNING: This product can expose you to chemicals including: Lead and lead compounds, which is known to the State of California to cause cancer and birth defects or other reproductive harm. For more information go to www.P65Warnings.ca.gov**

Use Longer

Lifetime extension

Repair	**No**

Use Again

Repack and remanufacture

Circularity Profile	**End of Life Information**
Take-back	**No**

Dimensions Drawings

Dimensions

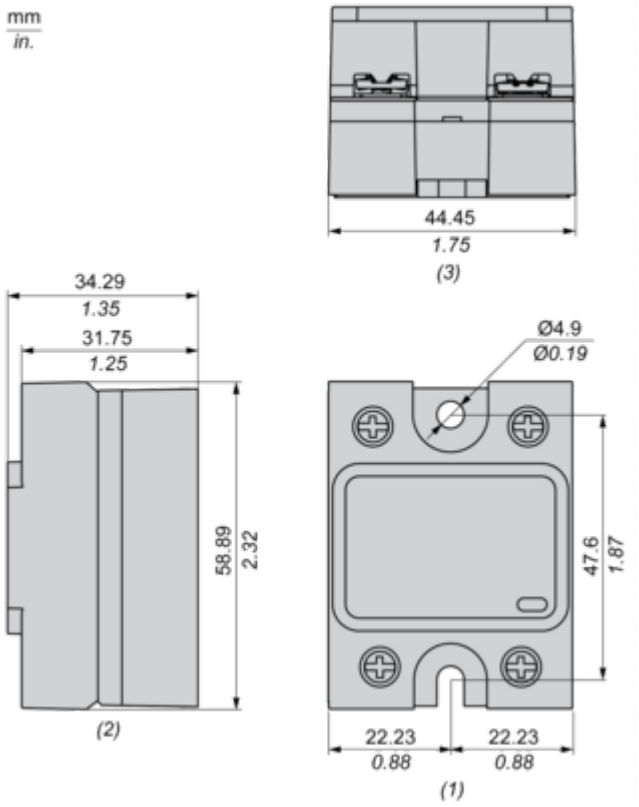

(1) Front view
(2) Side view
(3) Bottom view

Performance Curves

Derating Curves

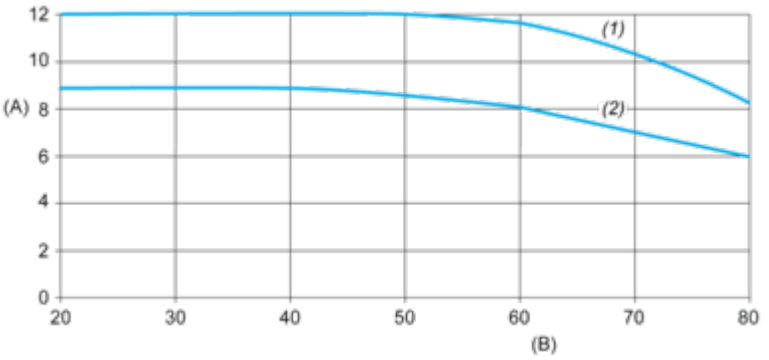

A : Load Current (Arms)
B : Ambient Temperature (°C)
(1) For Heatsink SSRHP25
(2) No Heatsink

Technical Illustration

Dimensions

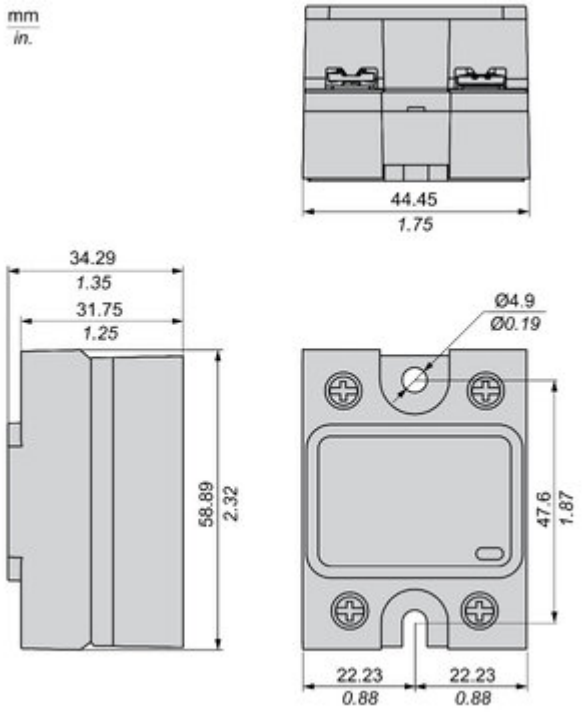

Image of product / Alternate images

Alternative







