Product data sheet

Specifications

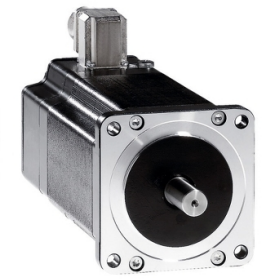

3-phase stepper motor - 4.8 Nm - shaft Ã˜ 12mm - L=98mm - w/o brake - term box

BRS39AW660ABA

Product availability: Non-Stock - Not normally stocked in distribution facility

Main

Range Compatibility	Lexium SD3
Product or Component Type	Motion control motor
Device short name	BRS3
Maximum mechanical speed	3000 rpm
Motor Type	3-phase stepper motor
Number of motor poles	6
Supply voltage limits	230 V AC 325 V DC
Mounting Support	Flange
Motor flange size	3.3 in (85 mm)
Length	5.6 in (141 mm)
Centring collar diameter	2.4 in (60 mm)

Complementary

Centring collar depth	0.08 in (2 mm)
Number of mounting holes	4
Mounting holes diameter	0.3 in (6.5 mm)
Circle diameter of the mounting holes	3.90 in (98.99 mm)
Electrical Connection	Terminal box
Holding brake	Without
Shaft end	Woodruff key
Second shaft	Without second shaft end
Shaft diameter	0.5 in (12 mm)
Shaft length	1.2 in (30 mm)
Nominal torque	35.4 lbf.in (4 N.m)
Holding torque	42.5 lbf.in (4.8 N.m)
Rotor inertia	2.2 kg.cm²
Resolution	1.8 °, 0.9 °, 0.72 °, 0.36 °, 0.18 °, 0.09 °, 0.072 °, 0.036 ° step angle 200, 400, 500, 1000, 2000, 4000, 5000, 10000 steps number of full steps per revolution
Accuracy error	+/- 6 arc min
Maximum starting frequency	5.3 kHz
Line Rated Current	5.8 A

Price is “List Price” and may be subject to a trade discount – check with your local distributor or retailer for actual price.

Disclaimer: This documentation is not intended as a substitute for and is not to be used for determining suitability or reliability of these products for specific user applications

Resistance	0.55 Ohm winding)
Time constant	9 ms
Maximum radial force Fr	110 N first shaft end) 50 N second shaft end)
Maximum axial force Fa	175 N tensile force) 30 N force pressure)
Service life in hours	20000 h bearing)
Angular acceleration	200000 rad/s²
Product Weight	7.05 lb(US) (3.2 kg)

Environment

Standards	IEC 60072-1 IEC 50347
Type of cooling	Natural convection
Ambient Air Temperature for Operation	-13…104 °F (-25…40 °C)
Ambient Air Temperature for Storage	-13…158 °F (-25…70 °C)
Operating altitude	<= 3280.84 ft (1000 m) without power derating
Relative humidity	15…85 % without condensation
Vibration resistance	20 m/s² maximum A IEC 60034-14
IP degree of protection	IP56 total except shaft bushing: conforming to IEC 60034-5 IP41 shaft bushing without shaft seal ring: conforming to IEC 60034-5
Temperature class	F winding IEC 60034-1

Ordering and shipping details

Category	US1PC5518284
Discount Schedule	PC55
GTIN	3389119223805
Returnability	No
Country of origin	DE

Packing Units

Unit Type of Package 1	PCE
Nbr. of units in pkg.	1
Package 1 Height	8.661 in (22.000 cm)
Package 1 Width	7.480 in (19.000 cm)
Package 1 Length	15.748 in (40.000 cm)
Package weight(Lbs)	8.863 lb(US) (4.020 kg)
Unit Type of Package 2	P06
Number of Units in Package 2	12
Package 2 Height	29.528 in (75.000 cm)
Package 2 Width	23.622 in (60.000 cm)
Package 2 Length	31.496 in (80.000 cm)
Package 2 Weight	128.053 lb(US) (58.084 kg)

Contractual warranty

Warranty (in months)	18

Environmental Data

Schneider Electric aims to achieve Net Zero status by 2050 through supply chain partnerships, lower impact materials, and circularity via our ongoing “Use Better, Use Longer, Use Again” campaign to extend product lifetimes and recyclability.

Environmental Data explained >

How we assess product sustainability >

Environmental footprint

Total lifecycle Carbon footprint	**1 288 kg CO2 eq.**
Carbon footprint of the manufacturing phase [A1 to A3]	**15 kg CO2 eq.**
Carbon footprint of the distribution phase [A4]	**0.5 kg CO2 eq.**
Carbon footprint of the installation phase [A5]	**0 kg CO2 eq.**
Carbon footprint of the use phase [B2, B3, B4, B6]	**1 272 kg CO2 eq.**
Carbon footprint of the end-of-life phase [C1 to C4]	**0.4 kg CO2 eq.**
Environmental Disclosure	Product Environmental Profile

Use Better

Materials and Substances

Packaging made with recycled cardboard	**Yes**
Packaging without single use plastic	**No**
EU RoHS Directive	Compliant By Exemption
REACh Regulation	Reference contains Substances of Very High Concern above the threshold
California proposition 65	**WARNING: This product can expose you to chemicals including: Lead and lead compounds, which is known to the State of California to cause cancer and birth defects or other reproductive harm. For more information go to www.P65Warnings.ca.gov**
PVC free	**Yes**

Use Longer

Lifetime extension

Repair	**No**

Use Again

Repack and remanufacture

Circularity Profile	No need of specific recycling operations
Take-back	**No**
WEEE Label	**The product must be disposed on European Union markets following specific waste collection and never end up in rubbish bins.**

Dimensions Drawings

Dimensions

3-Phase Stepper Motor in Terminal Box Version

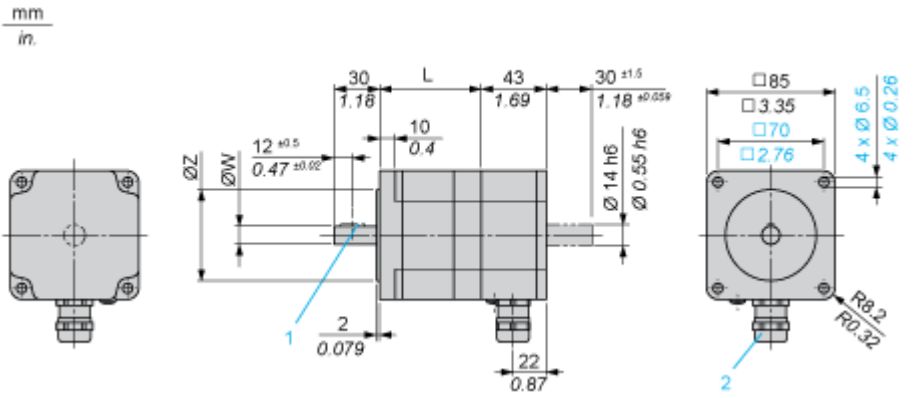

Dimensions in mm

L	Shaft diameter ØW	Centring collar ØZ	Woodruff key DIN 6888 (1)	Cable gland (2)
97.5 (+0.6) (-0.8)	12 h6	60 h8	4 x 6.5	ISO M20 x 1.5

Dimensions in in.

L	Shaft diameter ØW	Centring collar ØZ	Woodruff key DIN 6888 (1)	Cable gland (2)
3.84 (+0.023) (-0.031)	0.47 h6	2.36 h8	0.16 x 0.25	ISO M20 x 1.5

Performance Curves

Torque Characteristics

Measurement at 1000 Steps/Revolution, Nominal Voltage DC Bus U_N and Phase Current I_N

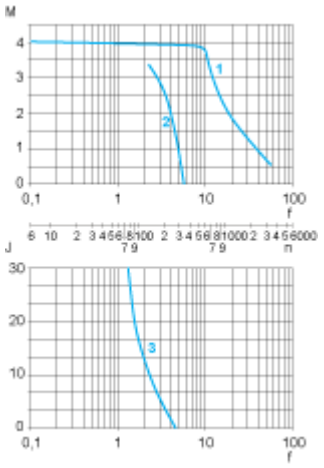

M : Torque in Nm

n : Speed in rpm

f : Frequency in kHz

J : Rotor inertia in $kg.cm^2$

1 : Pull-out torque

2 : Pull-in torque

3 : Maximum load inertia