Product data sheet
Characteristics

9001K2L35WH13
Illuminated push-button, Harmony 9001K, metal, projecting, white, 30mm, spring return, 24-28V, 1 C/O



Main

Range of Product	Harmony 9001K
Product or Component Type	Illuminated push-button
Device short name	9001K
Type of operator	Spring return
Operator profile	White projecting, unmarked
Operator additional information	Without guard

Complementary

Bezel material	Metal
Mounting diameter	1.18 in (30 mm)
Shape of signaling unit head	Octagonal
Light source	incandescent
Light source	Incandescent bulb
Bulb base	BA 9s
Light block supply	Direct
[Us] rated supply voltage	24...28 V AC/DC
Contacts type and composition	1 C/O
Connections - terminals	Screw clamp terminals 1 x 0.22...2 x 1.5 mm² IEC 60947-1
Tightening torque	7.08 lbf.in (0.8 N.m) IEC 60947-1
Shape of screw head	Cross slotted
Mechanical durability	5000000 cycles
Operating position	Any position
[Ui] rated insulation voltage	250 V 3)IEC 60947-1
[Uimp] rated impulse withstand voltage	2.5 kV IEC 60947-1
Contacts material	Silver alloy contacts
Contact operation	Standard
Positive opening	Without
Short-circuit protection	10 A cartridge fuse IEC 60947-5-1
[Ith] conventional free air thermal current	10 A
[Icm] rated short-circuit making capacity	12 KA 600 V AC-15, 7200 VA 15 KA 480 V AC-15, 7200 VA 30 KA 240 V AC-15, 7200 VA 60 kA 120 V AC-15, 7200 VA
Rated breaking capacity	1.2 KA 600 V AC-15, 720 VA 1.5 KA 480 V AC-15, 720 VA 3 KA 240 V AC-15, 720 VA 6 KA 120 V AC-15, 720 VA 0.1 KA 600 V DC-13 0.27 KA 250 V DC-13 0.55 kA 125 V DC-13
CAD overall width	2.13 in (54 mm)
CAD overall height	1.65 in (42 mm)
CAD overall depth	4.06 in (103 mm)

The information provided in this documentation contains general descriptions and/or technical characteristics of the performance of the products contained herein.
This documentation is not intended as a substitute for and is not to be used for determining suitability or reliability of these products for specific user applications.
It is the duty of any such user or integrator to perform the appropriate and complete risk analysis, evaluation and testing of the products with respect to the relevant specific application or use thereof.
Neither Schneider Electric Industries SAS nor any of its affiliates or subsidiaries shall be responsible or liable for misuse of the information contained herein.

Terminals description ISO n°1	(13-14-11-12)OF
Net Weight	0.37 lb(US) (0.166 kg)
Device presentation	Complete product
Cap/operator or lens colour	White
[Us] rated supply voltage	24...28 V
Light block supply	Full voltage
Operator profile	Projecting
Type of operator	Spring return
Size	30 mm

Environment

Standards	EN/IEC 60947-1 EN/IEC 60947-5-4 JIS C 852 EN/IEC 60947-5-1 JIS C 4520 UL 508 CSA C22.2 No 14
Product Certifications	NEMA UL 508
Protective treatment	TC
Ambient Air Temperature for Storage	-40…158 °F (-40…70 °C)
Ambient Air Temperature for Operation	-13…158 °F (-25…70 °C)
Vibration resistance	7 gn 2…500 Hz)IEC 60068-2-6
Shock resistance	50 gn IEC 60068-2-27
Overvoltage category	Class II IEC 61140
IP degree of protection	IP66 IEC 60529
NEMA degree of protection	NEMA 1 NEMA 12 NEMA 13 NEMA 2 NEMA 3 NEMA 3R NEMA 4

Ordering and shipping details

Category	21426-9001 K (NOT KA,KM,KX)
Discount Schedule	CS1
GTIN	785901831334
Returnability	No
Country of origin	MX

Packing Units

Unit Type of Package 1	PCE
Number of Units in Package 1	1
Package 1 Height	1.90 in (4.826 cm)
Package 1 Width	2.30 in (5.842 cm)
Package 1 Length	4.50 in (11.43 cm)
Package 1 Weight	8.00 oz (226.796 g)

Offer Sustainability

Sustainable offer status	Green Premium product
California proposition 65	WARNING: This product can expose you to chemicals including: Lead and lead compounds, which is known to the State of California to cause cancer and birth defects or other reproductive harm. For more information go to www.P65Warnings.ca.gov
REACh Regulation	REACh Declaration
EU RoHS Directive	Pro-active compliance (Product out of EU RoHS legal scope) EU RoHS Declaration
Mercury free	Yes
China RoHS Regulation	China RoHS Declaration
RoHS exemption information	Yes
Environmental Disclosure	Product Environmental Profile
WEEE	The product must be disposed on European Union markets following specific waste collection and never end up in rubbish bins.

Contractual warranty

Warranty	18 months

Dimensions

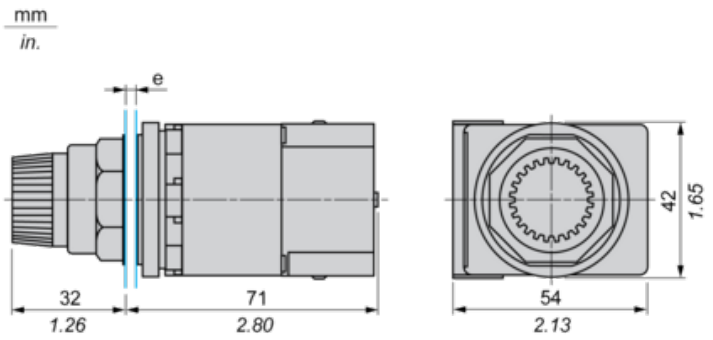

e panel thickness: 1 to 6 mm/ 0.04 to 0.24 in.

Contact Block Mounting Position

Top and Rear views

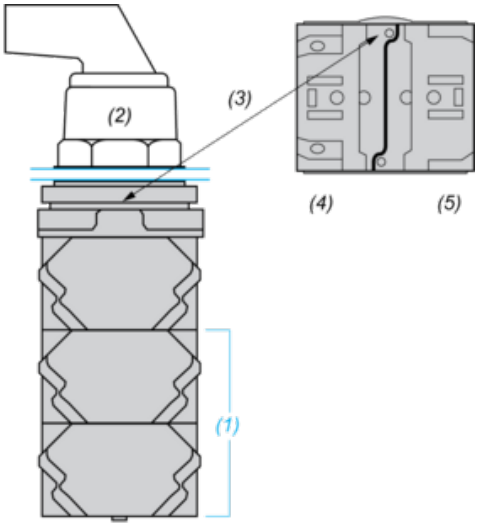

(1) It is possible to mount up to 3 levels of contacts blocks (maximum of 6 contacts blocks)
(2) Operator
(3) Locating notch
(4) Side 1
(5) Side 2

Panel Cut-Out

Clearance

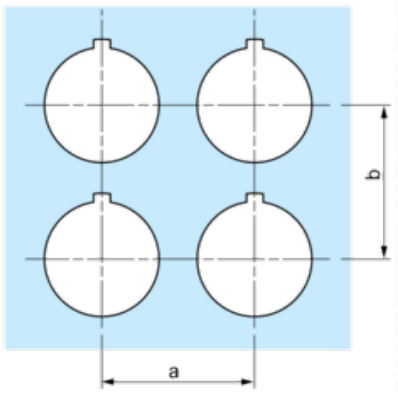

Legend plate	a min.		b min.	
	mm	in.	mm	in.
9001KN2••	57.2	2.25	44.5	1.75
9001KN3••	57.2	2.25	50.8	2.00

Individual Cut-outs Details

2 alternatives

mm
in.

