Product data sheet

Specifications



To be discontinued

standard analog output kit, Modicon STB, 4 to 20mA, 2O, 15 bits with sign

STBACO0220K

To be discontinued on: Dec 1, 2027

To be end-of-service on: Dec 31, 2035

Product availability: Stock - Normally stocked in distribution facility

Main

Range of Product	Modicon STB distributed I/O solution
Product or Component Type	Standard analog output kit
Kit composition	STBXTS2100, 6-terminal spring clamp connector STBXTS1100, 6-terminal screw type connector STBXBA2000 base STBACO0220 module
Product Compatibility	Power distribution module STBPDT3100/3105 Mounting base STBXBA1000
Analogue input number	0
Analogue output number	2

Complementary

Analogue output current	0.02 A
Update time	8 ms
Conversion time	4 ms
Analogue output type	Current 4...20 mA
Height	0.7 in (18.4 mm)
Width	5.05 in (128.3 mm)
Depth	2.8 in (70 mm)

Environment

Marking	CE
Relative humidity	95 % 140 °F (60 °C) without condensation

Ordering and shipping details

Category	US1PC3218215
Discount Schedule	PC32
GTIN	3595863948769
Returnability	Yes
Country of origin	ID

Packing Units

Price is “List Price” and may be subject to a trade discount – check with your local distributor or retailer for actual price.

Disclaimer: This documentation is not intended as a substitute for and is not to be used for determining suitability or reliability of these products for specific user applications

Unit Type of Package 1	PCE
Nbr. of units in pkg.	1
Package 1 Height	1.06 in (2.7 cm)
Package 1 Width	3.1 in (8.0 cm)
Package 1 Length	5.1 in (13.0 cm)
Package weight(Lbs)	5.0 oz (141.0 g)
Unit Type of Package 2	S02
Number of Units in Package 2	28
Package 2 Height	5.9 in (15.0 cm)
Package 2 Width	11.8 in (30.0 cm)
Package 2 Length	15.7 in (40.0 cm)
Package 2 Weight	9.643 lb(US) (4.374 kg)
Unit Type of Package 3	PAL
Number of Units in Package 3	448
Package 3 Height	23.6 in (60.0 cm)
Package 3 Width	31.5 in (80.0 cm)
Package 3 Length	176.4 in (448.0 cm)
Package 3 Weight	139.262 lb(US) (63.168 kg)

Contractual warranty

Warranty (in months)	18

Environmental Data

Schneider Electric aims to achieve Net Zero status by 2050 through supply chain partnerships, lower impact materials, and circularity via our ongoing “Use Better, Use Longer, Use Again” campaign to extend product lifetimes and recyclability.

Environmental Data explained >

How we assess product sustainability >

Environmental footprint

Total lifecycle Carbon footprint	**56 kg CO2 eq.**
Carbon footprint of the manufacturing phase [A1 to A3]	**7 kg CO2 eq.**
Carbon footprint of the distribution phase [A4]	**0 kg CO2 eq.**
Carbon footprint of the installation phase [A5]	**0 kg CO2 eq.**
Carbon footprint of the use phase [B2, B3, B4, B6]	**49 kg CO2 eq.**
Carbon footprint of the end-of-life phase [C1 to C4]	**0 kg CO2 eq.**
Environmental Disclosure	Product Environmental Profile

Use Better

Materials and Substances

Packaging made with recycled cardboard	**No**
Packaging without single use plastic	**No**
SCIP Number	**6830dd70-e4bc-47df-85c7-e41f888576f4**
EU RoHS Directive	Compliant By Exemption
REACh Regulation	Reference contains Substances of Very High Concern above the threshold
California proposition 65	**WARNING: This product can expose you to chemicals including: Lead and lead compounds, which is known to the State of California to cause cancer and birth defects or other reproductive harm. For more information go to www.P65Warnings.ca.gov**

Use Longer

Lifetime extension

Repair	**No**

Use Again

Repack and remanufacture

Circularity Profile	End of Life Information
Take-back	**No**

Dimensions Drawings

Dimensions

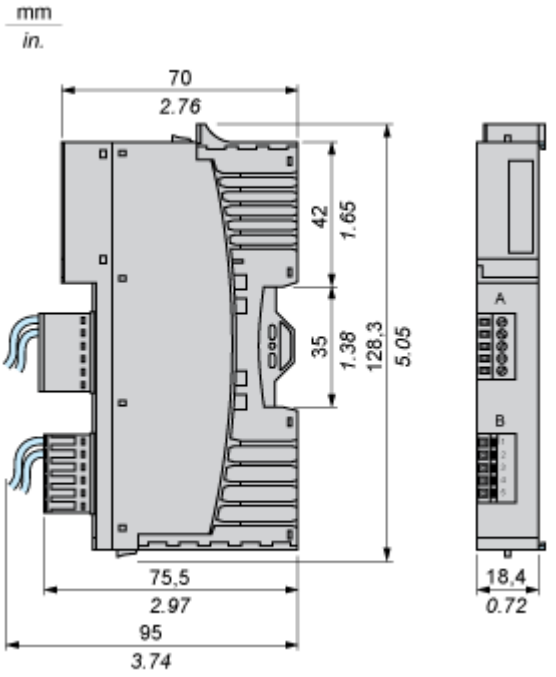

Connections and Schema

Wiring Diagrams

Examples

2 non-isolated analog actuators, 24 VDC supplied by the PDM

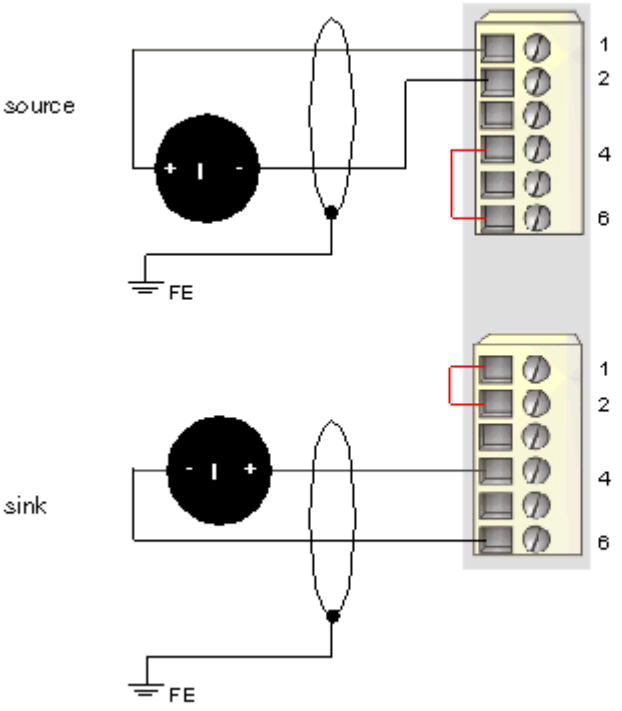

2 isolated analog actuators, external 24 VDC power supply

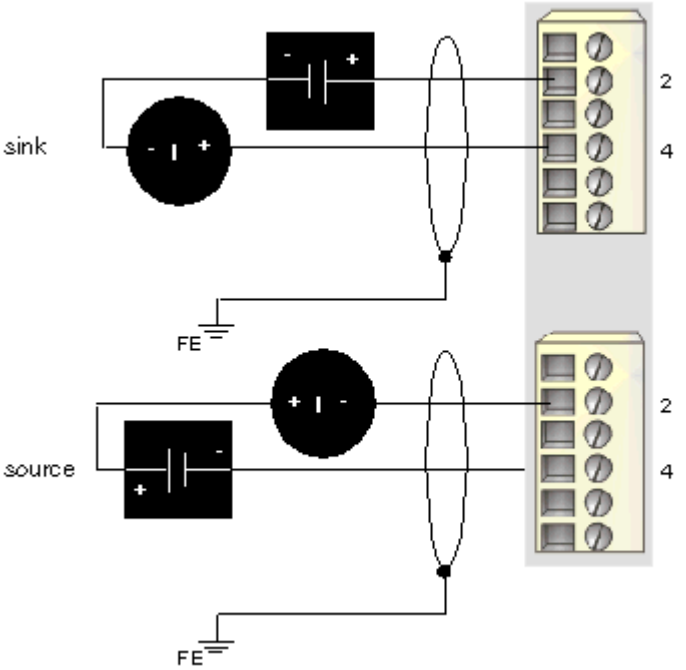

Pin	Top Connections	Bottom Connections
1	+24 VDC loop supply	+24 VDC loop supply

Pin	Top Connections	Bottom Connections
2	output to actuator 1	output to actuator 2
3	no connection	no connection
4	output channel return	output channel return
5	no connection	no connection
6	loop power return (to the module)	loop power return (to the module)